AUDI

# 42279

PK1164 590 3.65

Orig.:

8K0254252GX, 8K0254253JX
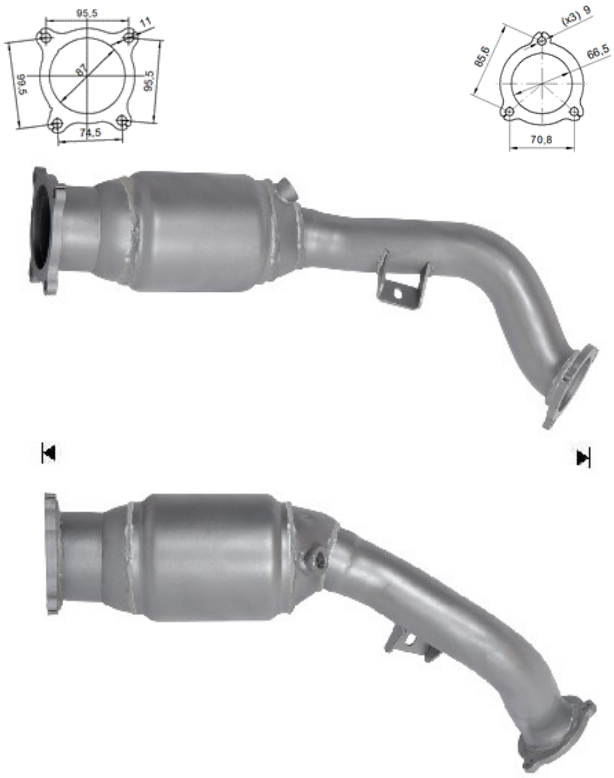
| MARCA | MODELO | FECHA |
|---|---|---|
| **AUDI** | A4 1.8i TFSI 16V 1798 cc 125 Kw / 170 cv CJEB | 1/13>12/15 |
| **AUDI** | A4 2.0i TFSI 16V 1984 cc 165 Kw / 224 cv CNCD | 1/13>12/15 |
| **AUDI** | A4 Quattro 1.8i TFSI 16V 1798 cc 125 Kw / 170 cv CJEB | 11/13>12/15 |
| **AUDI** | A4 Quattro 2.0i TFSI 16V 1984 cc 165 Kw / 224 cv CNCD | 5/13>12/15 |
| **AUDI** | A5 1.8 TFSI 16V 1798 cc 106 Kw / 144 cv CJED | 9/14>>1/17 |
| **AUDI** | A5 1.8i TFSI 16V 1798 cc 125 Kw / 170 cv CJEB | 9/11>1/17 |
| **AUDI** | A5 1.8i TFSI 16V 1798 cc 130 Kw / 177 cv CJEE | 5/15>1/17 |
| **AUDI** | **A5 2.0i TFSI 16V 1984 cc 165 Kw / 224 cv CNCD** | 5/13>5/16 |
| **AUDI** | A5 2.0i TFSI 16V 1984 cc 169 Kw / 230 cv CNCE | 8/15>1/17 |
| **AUDI** | A5 Quattro 2.0i TFSI 16V 1984 cc 165 Kw / 224 cv CNCD | 5/13>5/16 |
| **AUDI** | A5 Quattro 2.0i TFSI 16V 1984 cc 169 Kw / 230 cv CNCE | 8/15>1/17 |