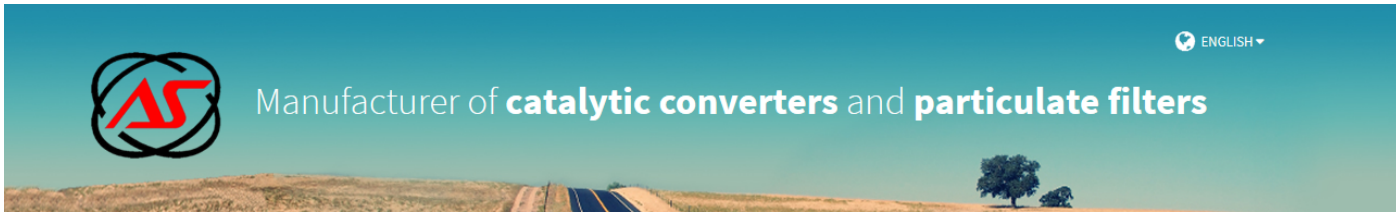

FORD

FD1059Q

PK1141 | OBD | 690 | 6.20 | Euro 5

OE references:

1842386, 5090572, 5116413, 5225605
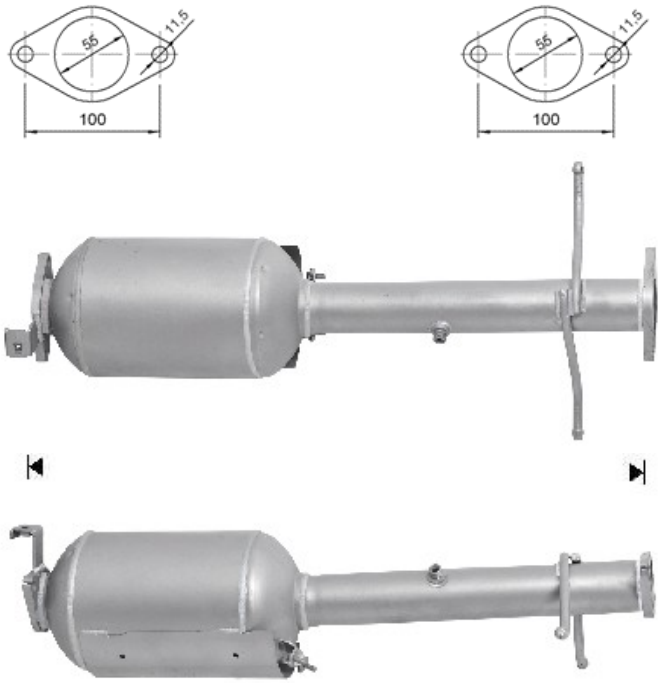
MAKE	MODEL	DATE
FORD	TOURNEO CONNECT 1.8TD TDCI DPF 1753 cc 55 Kw / 75 cv P7PB	7/10>12/13
FORD	TOURNEO CONNECT 1.8TD TDCI DPF 1753 cc 66 Kw / 90 cv P9PC	7/10>12/13
FORD	TOURNEO CONNECT 1.8TD TDCI DPF 1753 cc 81 Kw / 110 cv RWPD	7/10>12/13
FORD	TRANSIT CONNECT 1.8TD TDCI DPF 1753 cc 55 Kw / 75 cv P7PB	7/10>12/13
FORD	TRANSIT CONNECT 1.8TD TDCI DPF 1753 cc 66 Kw / 90 cv P9PC	7/10>12/13
FORD	**TRANSIT CONNECT 1.8TD TDCI DPF 1753 cc 81 Kw / 110 cv RWPD**	7/10>12/13