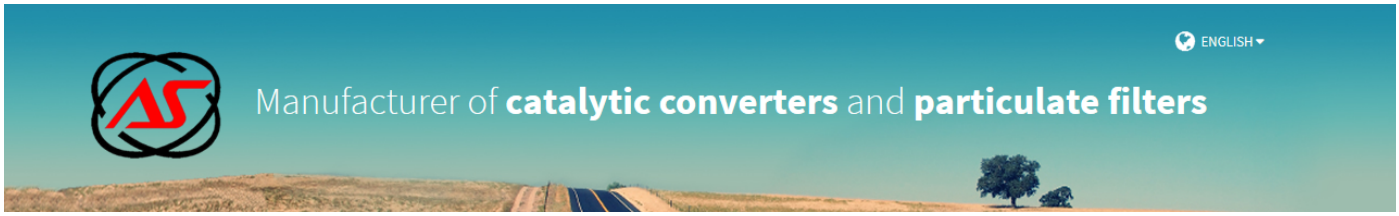

ALFA ROMEO, FIAT

FD1084Q

PK1295 | OBD | 630 mm. | 5.60 Kg.

OE references:

51861468, 55199689

MAKE	MODEL	DATE
ALFA ROMEO	MI-TO 1.3TD MJTD DPF 1248 cc 66 Kw / 90 cv 199A3000	9/08>12/11
FIAT	GRANDE PUNTO 1.3TD MJTD DPF 1248 cc 51 Kw / 69 cv 199B2000	7/08>12/11
FIAT	**GRANDE PUNTO 1.3TD MJTD DPF 1248 cc 55 Kw / 75 cv 199A2000**	10/05>12/10
FIAT	GRANDE PUNTO 1.3TD MJTD DPF 1248 cc 66 Kw / 90 cv 199A3000	10/05>12/10

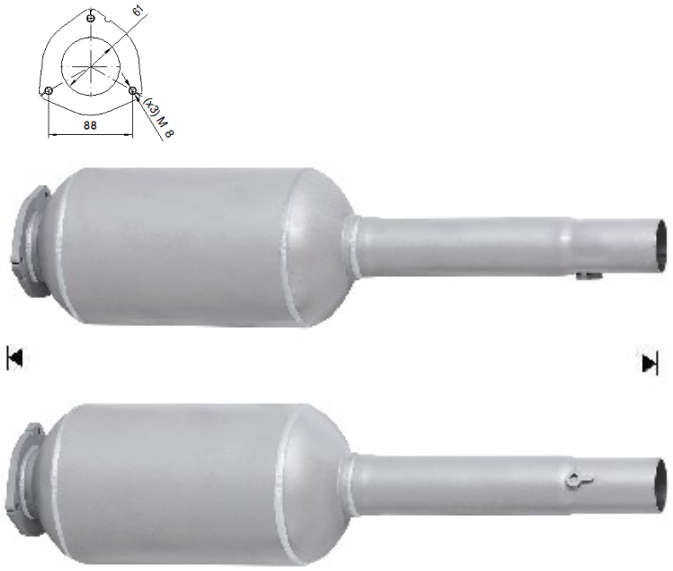

Ø 50,8 ext