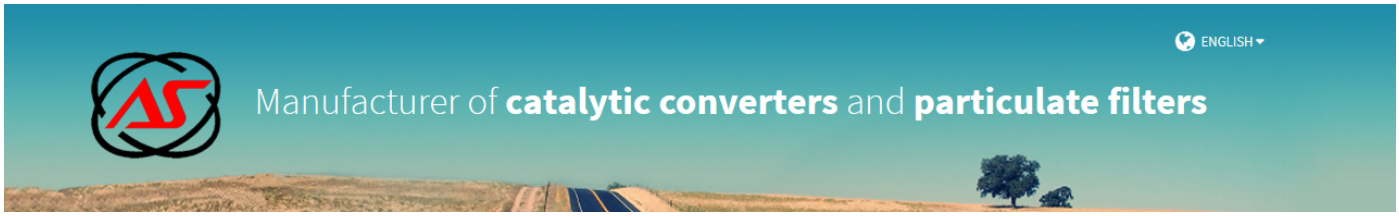


ALFA ROMEO, FIAT

# FD1084Q

PK1295 | OBD | 630 mm. | 5.60 Kg.

OE references:

51861468, 55199689

| MAKE | MODEL | DATE |
|---|---|---|
| ALFA ROMEO | MI-TO 1.3TD MJTD DPF 1248 cc 66 Kw / 90 cv 199A3000 | 9/08>12/11 |
| **FIAT** | GRANDE PUNTO 1.3TD MJTD DPF 1248 cc 51 Kw / 69 cv 199B2000 | 7/08>12/11 |
| **FIAT** | **GRANDE PUNTO 1.3TD MJTD DPF 1248 cc 55 Kw / 75 cv 199A2000** | 10/05>12/10 |
| **FIAT** | GRANDE PUNTO 1.3TD MJTD DPF 1248 cc 66 Kw / 90 cv 199A3000 | 10/05>12/10 |

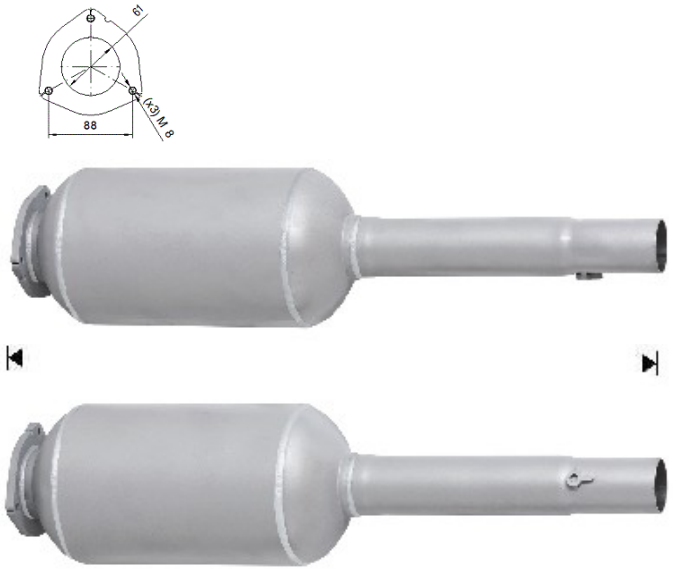


Ø 50,8 ext