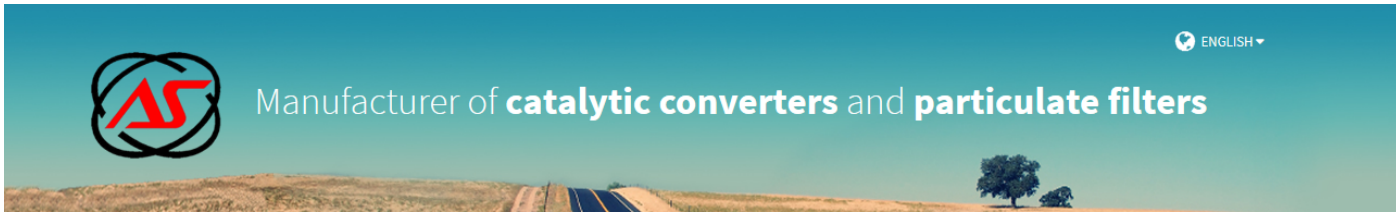

CITROËN, FIAT, PEUGEOT

FD5107Q

PK1169 | OBD | mm. 735 | Kg. 10.95 | Euro 5

OE references:

1367601080, 1389245080, 1606619280, 1617156380

MAKE	MODEL	DATE
CITROËN	**JUMPER 3.0TD HDI DPF 2999 cc 130 Kw / 177 cv F30DT**	10/11>
FIAT	DUCATO 3.0TD MJTD DPF 2999 cc 130 Kw / 177 cv F30DT	6/11>
PEUGEOT	BOXER 3.0TD HDI DPF 2999 cc 130 Kw / 177 cv F30DT	10/11>

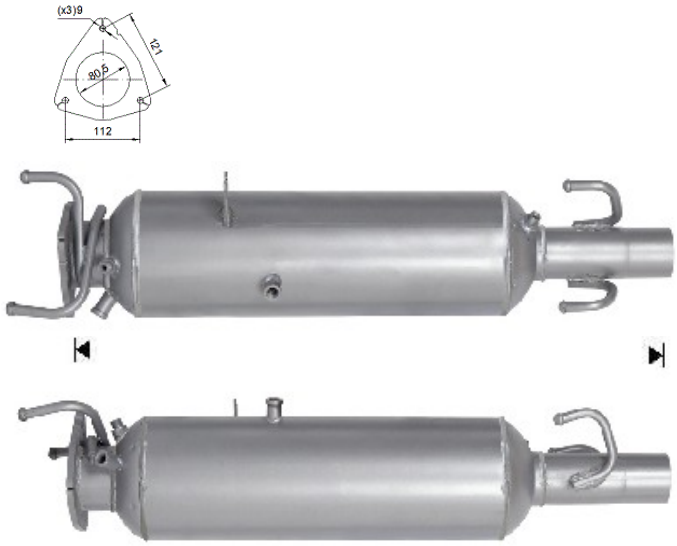

Ø 63,2 ext.