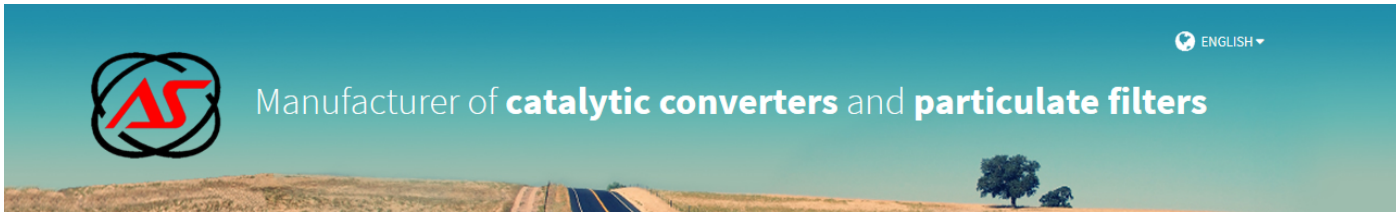


CITROËN, PEUGEOT

# FD5106

PK1173 | OBD | 910 | 6.70 | Euro 5

OE references:

1606604680

| MAKE | MODEL | DATE |
|---|---|---|
| **CITROËN** | **JUMPER 2.2TD HDI DPF 2198 cc 81 Kw / 110 cv P22DTE (4HG)** | 10/11> |
| **CITROËN** | JUMPER 2.2TD HDI DPF 2198 cc 96 Kw / 130 cv P22DTE (4HH) | 10/11> |
| **CITROËN** | JUMPER 2.2TD HDI DPF 2198 cc 110 Kw / 150 cv P22DTE (4HJ) | 10/11> |
| PEUGEOT | BOXER 2.2TD HDI DPF 2198 cc 81 Kw / 110 cv P22DTE (4HG) | 10/11> |
| PEUGEOT | BOXER 2.2TD HDI DPF 2198 cc 96 Kw / 130 cv P22DTE (4HH) | 10/11> |
| PEUGEOT | BOXER 2.2TD HDI DPF 2198 cc 110 Kw / 150 cv P22DTE (4HJ) | 10/11> |

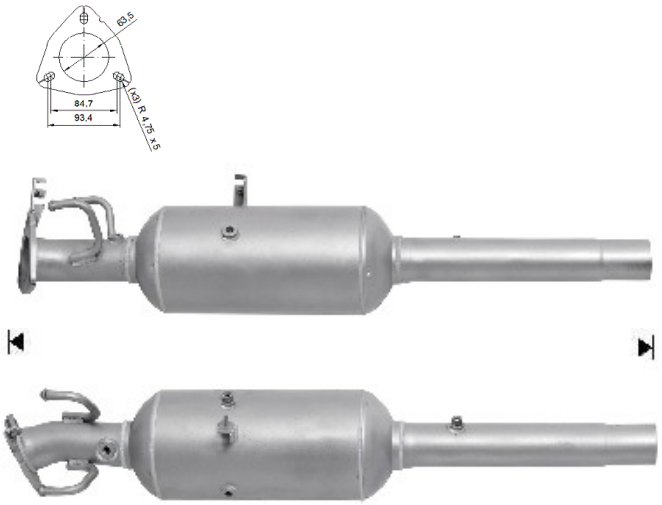


Ø 56,5 ext.