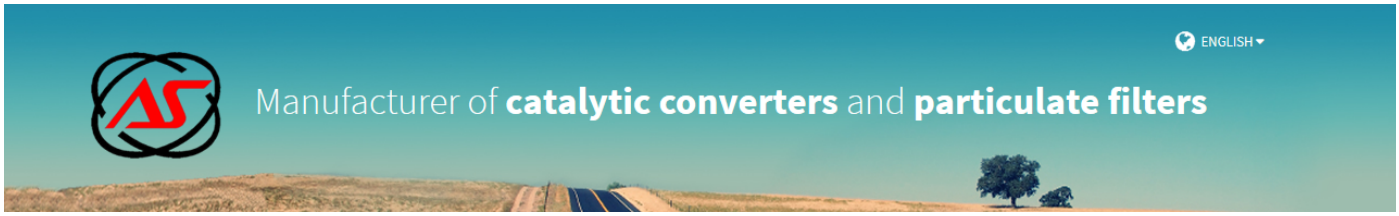

CITROËN, PEUGEOT

FD5106Q

PK1173 | OBD | 910 | 7.60 | Euro 5

OE references:

1606604680

MAKE	MODEL	DATE
CITROËN	JUMPER 2.2TD HDI DPF 2198 cc 81 Kw / 110 cv P22DTE (4HG)	10/11>
CITROËN	JUMPER 2.2TD HDI DPF 2198 cc 96 Kw / 130 cv P22DTE (4HH)	10/11>
CITROËN	**JUMPER 2.2TD HDI DPF 2198 cc 110 Kw / 150 cv P22DTE (4HJ)**	10/11>
PEUGEOT	BOXER 2.2TD HDI DPF 2198 cc 81 Kw / 110 cv P22DTE (4HG)	10/11>
PEUGEOT	BOXER 2.2TD HDI DPF 2198 cc 96 Kw / 130 cv P22DTE (4HH)	10/11>
PEUGEOT	BOXER 2.2TD HDI DPF 2198 cc 110 Kw / 150 cv P22DTE (4HJ)	10/11>

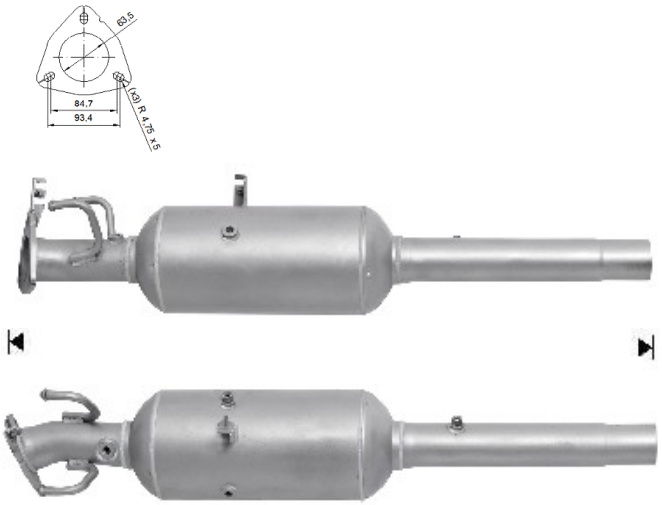

Ø 56,5 ext.