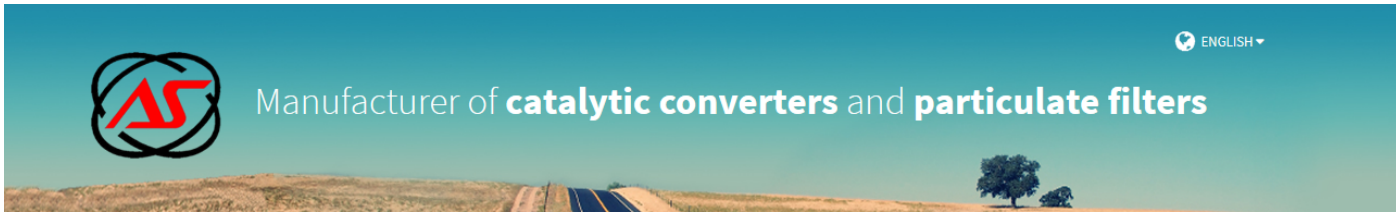

ALFA ROMEO

FD5024

PK975 | OBD | 900 | 7.50

OE references:

51780162
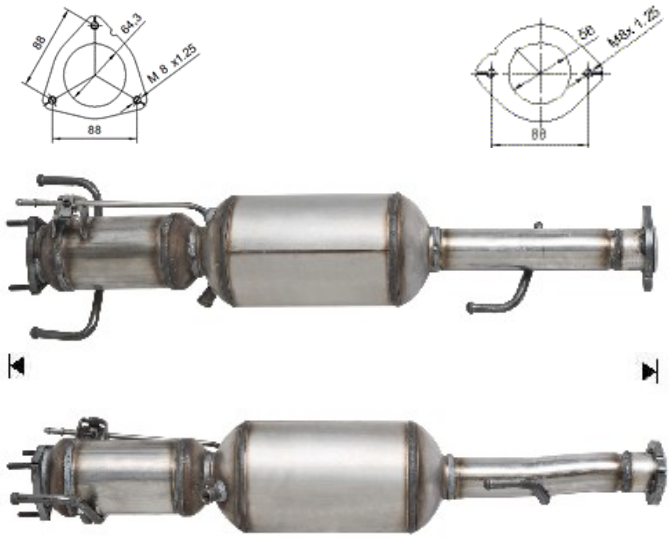
MAKE	MODEL	DATE
ALFA ROMEO	147 1.9TD JTDM DPF 1910 cc 84 Kw / 114 cv 939A7.000	10/04>9/05
ALFA ROMEO	147 1.9TD JTDM DPF 1910 cc 88 Kw / 120 cv 937A3.000	6/05>6/07
ALFA ROMEO	147 1.9TD JTD DPF 1910 cc 100 Kw / 136 cv 192B1.000	10/04>6/07
ALFA ROMEO	147 1.9TD JTD DPF 1910 cc 110 Kw / 150 cv 937A5.000	7/05>6/07
ALFA ROMEO	**GT 1.9TD JTD DPF 1910 cc 110 Kw / 150 cv 937A5.000**	7/06>10/07