Manufacturer of **catalytic converters** and **particulate filters**

SUBARU, TOYOTA

95148D

PK1153 | OBD | mm. 400 | Kg. 2.60 | Euro 5

OE

2505133090
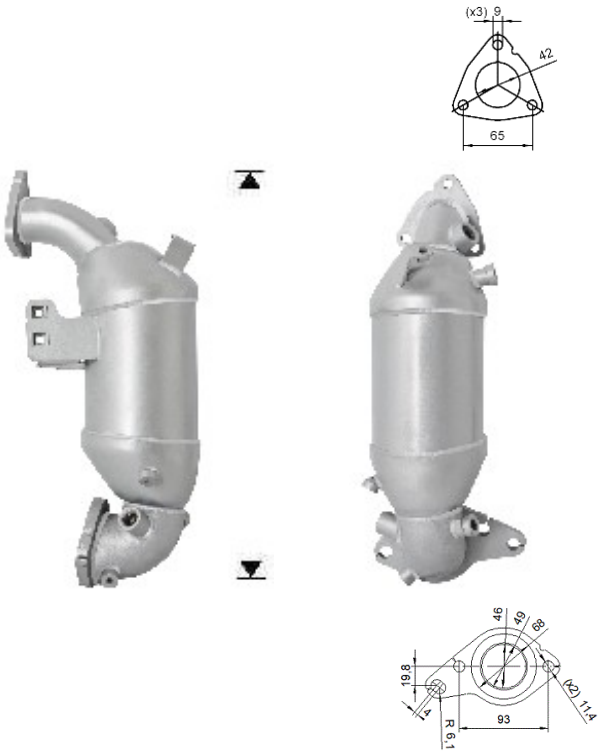
MAKE	MODEL	DATE
SUBARU	TREZIA 1.4TD DPF 1364 cc 66 Kw / 90 cv 1NDTV	11/10>4/15
TOYOTA	AURIS 1.4TD D4D DPF 1364 cc 66 Kw / 90 cv 1NDTV	12/08>9/12
TOYOTA	COROLLA 1.4TD D4D DPF 1364 cc 66 Kw / 90 cv 1NDTV	12/08>5/13
TOYOTA	URBAN CRUISER 1.4TD D4D DPF 1364 cc 66 Kw / 90 cv 1NDTV	1/09>4/14
TOYOTA	**VERSO 1.4TD D4D DPF 1364 cc 66 Kw / 90 cv 1NDTV**	11/10>3/15
TOYOTA	YARIS 1.4TD D4D DPF 1364 cc 66 Kw / 90 cv 1NDTV	11/08>5/15