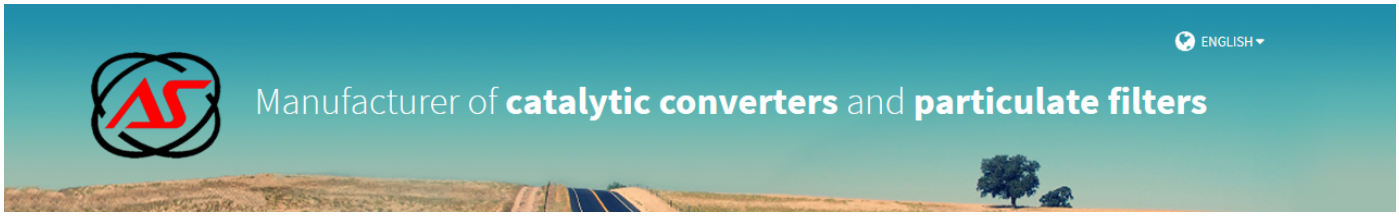

NISSAN, OPEL, SUZUKI

74162

PK980 | OBD | 410 | 3.40 | Euro 5

OE

140044A00C, 1411084M00H02, 14110M68KAH02, 4700598, 95514294

MAKE	MODEL	DATE
NISSAN	PIXO 1.0i 12V 996 cc 50 Kw / 68 cv K10B	3/09>
NISSAN	PIXO 1.0i 12V LPG 996 cc 50 Kw / 68 cv K10B	3/09>
OPEL	AGILA 1.0i 12V 996 cc 50 Kw / 68 cv K10B	9/10>
OPEL	AGILA 1.0i 12V LPG 998 cc 48 Kw / 65 cv K10B	1/10>12/12
SUZUKI	ALTO 1.0i 12V 996 cc 50 Kw / 68 cv K10B	12/10>
SUZUKI	ALTO 1.0i 12V LPG 996 cc 50 Kw / 68 cv K10B	4/09>
SUZUKI	**CELERIO 1.0i 12V 998 cc 50 Kw / 68 cv K10BS**	3/14>
SUZUKI	SPLASH 1.0i 12V 996 cc 50 Kw / 68 cv K10B	7/10>

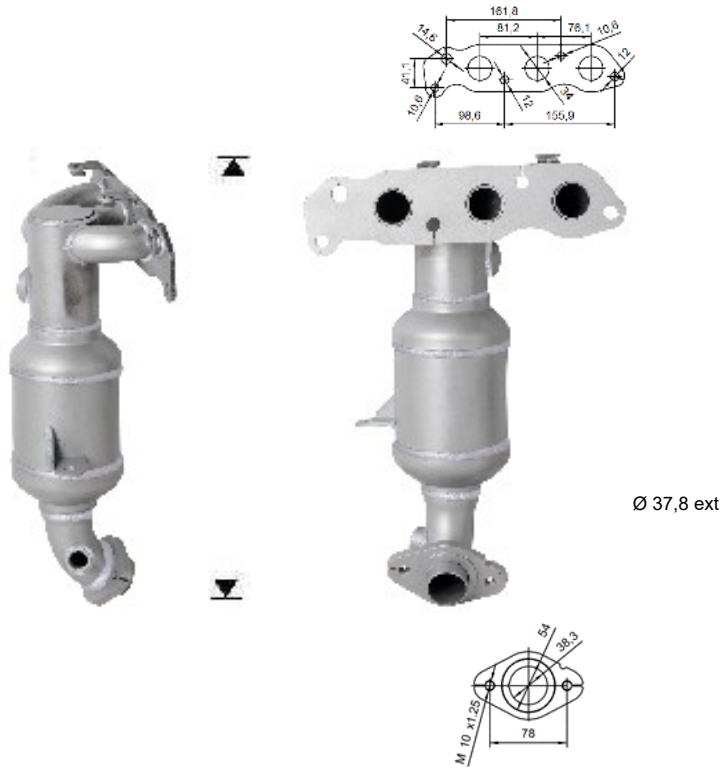

Ø 37,8 ext