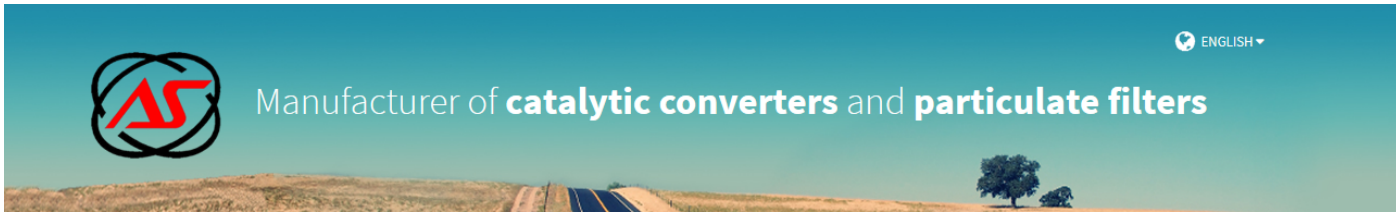

CITROËN, FIAT, LANCIA, PEUGEOT

28608D

PK592 | OBD | 640 | 5.30

OE

1493804080, 1731X8, 9456211680, 980417680
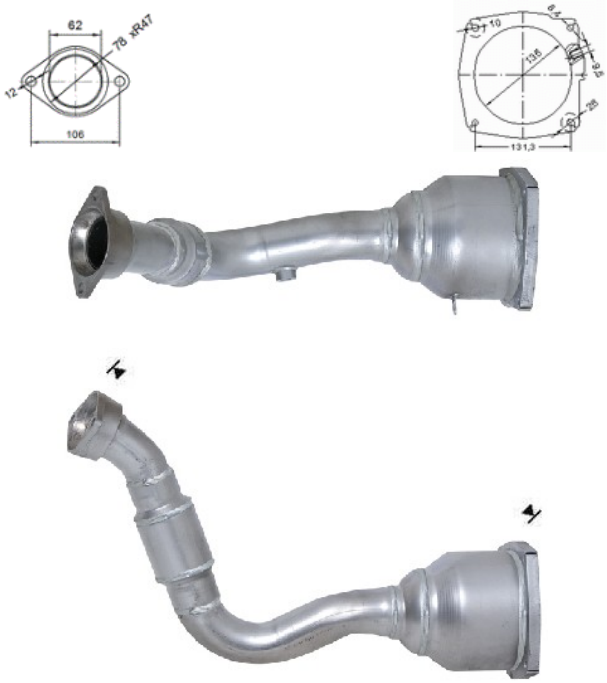
MAKE	MODEL	DATE
CITROËN	C8 2.2TD HDI DPF 2179 cc 94 Kw / 128 cv DW12TED4 (4HW)	6/02>8/03
FIAT	ULYSSE 2.2TD JTD DPF 2179 cc 94 Kw / 128 cv 4HW	8/02>8/03
LANCIA	PHEDRA 2.2TD JTD DPF 2179 cc 94 Kw / 128 cv 4HW	8/02>8/03
PEUGEOT	**807 2.2TD HDI DPF 2179 cc 94 Kw / 128 cv DW12TED4 (4HW)**	6/02>8/03