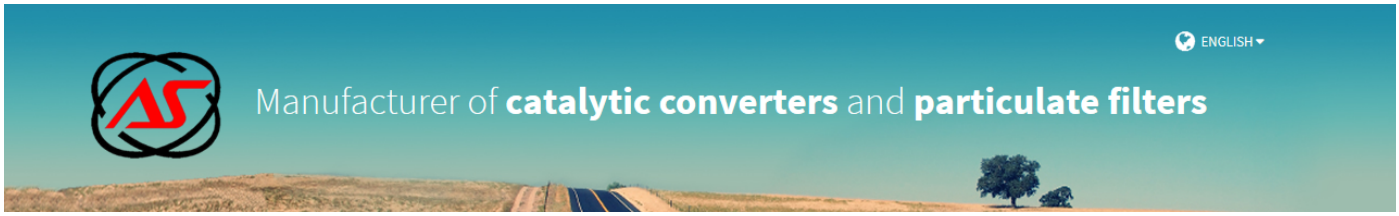

MERCEDES

71250

PK513 | OBD | 1610 | 6.60 | (1)

OE

1704906319

MAKE	MODEL		DATE
MERCEDES	SLK 200 Kompressor 1998 cc 120 Kw / 163 cv 111958 W170		4/00>12/03
MERCEDES	**SLK 230 Kompressor 2295 cc 145 Kw / 197 cv 111983 W170**	(1)	6/99>12/03

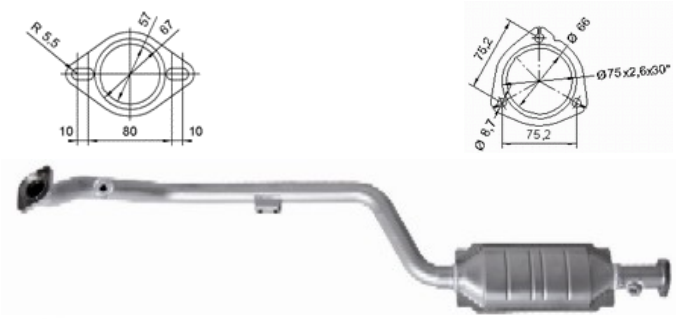

Ø 77x120º