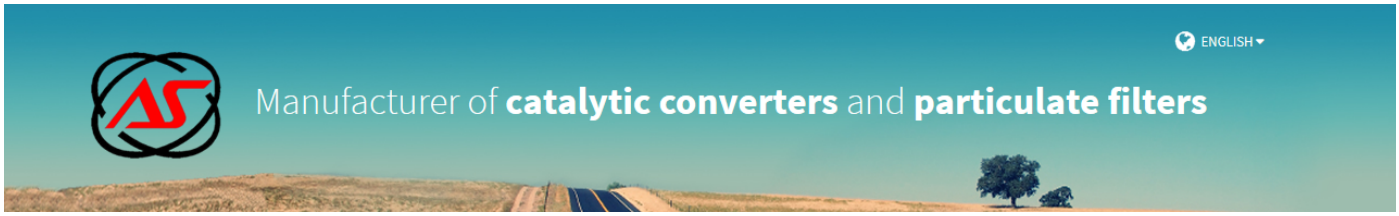


FORD

# 20475

KIT PK1088 | OBD | mm. 810 | Kg. 5.70 | Man | Euro 5 (1) | Euro 6 (2)

OE

1787285, 1831667, 1836874, 2214373, 2361518, 2381160
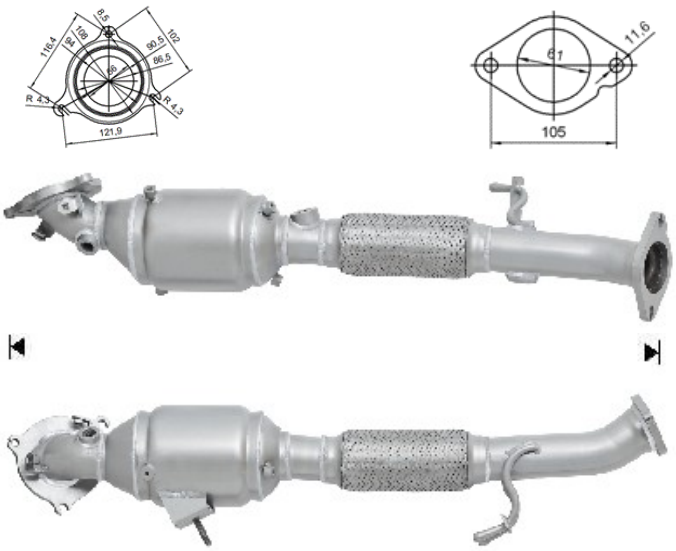
| MAKE | MODEL | | DATE |
|---|---|---|---|
| **FORD** | KUGA 1.5Ti VCT 16V EcoBoost 1499 cc 88 Kw / 120 cv BNMA | (2) | 10/14>5/18 |
| **FORD** | KUGA 1.5Ti VCT 16V EcoBoost GPF 1499 cc 88 Kw / 120 cv BNMC | (2) | 5/18> |
| **FORD** | KUGA 1.5i Ti 16V EcoBoost GPF 1499 cc 110 Kw / 150 cv M8MD, M8ME | (2) | 5/18>11/19 |
| **FORD** | **KUGA 1.5Ti VCT 16V EcoBoost 1499 cc 110 Kw / 150 cv M8MA, M8MB, M8MC** | (2) | 10/14>5/18 |
| **FORD** | KUGA 1.6Ti VCT 16V EcoBoost 1596 cc 110 Kw / 150 cv JQMA, JQMB | (1) | 11/12>12/14 |