Manufacturer of **catalytic converters** and **particulate filters**

FORD

20407

PK142 | OBD | 490 | 5.60

OE

1113277, 1839937
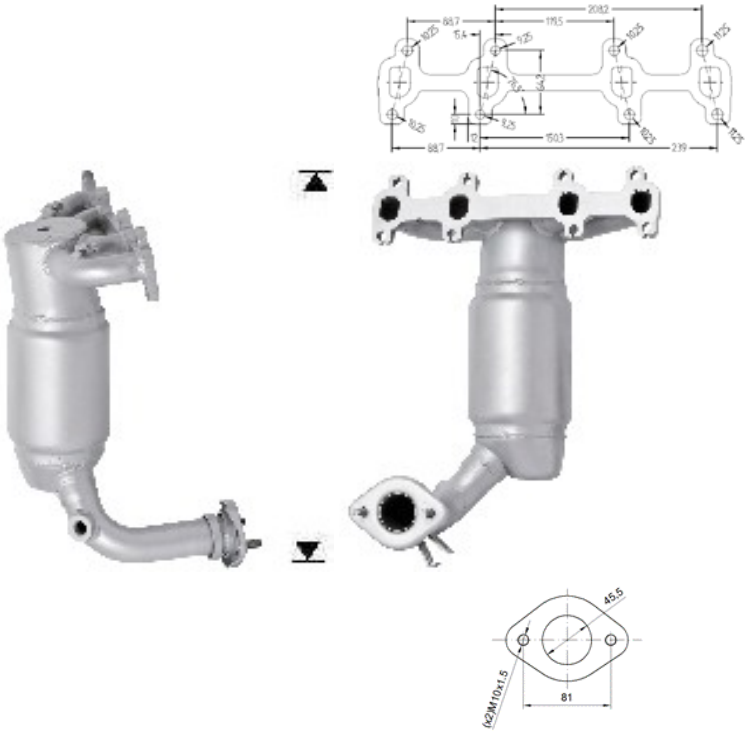
MAKE	MODEL	DATE
FORD	FIESTA 1.3i 1299 cc 44 Kw / 60 cv	8/00>10/02
FORD	**KA 1.3i 1299 cc 44 Kw / 60 cv**	8/00>10/02