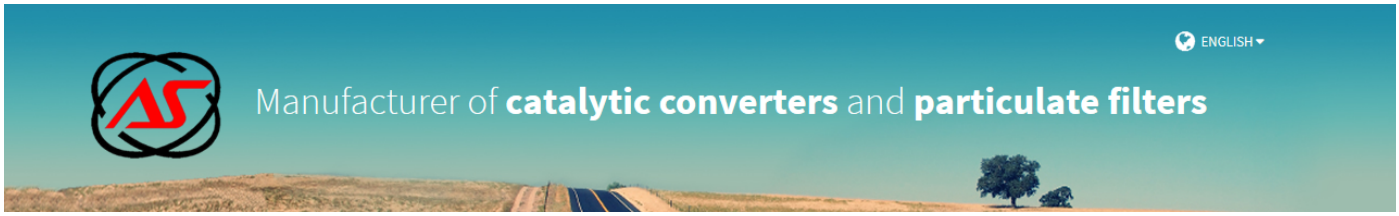

FORD

20473

PK1088 | OBD | 730 | 5.10 | Euro 5

OE

1702514, 1715062, 1718050, 1724812, 1738825, 1786866, 1803186, 1828223, 1839595
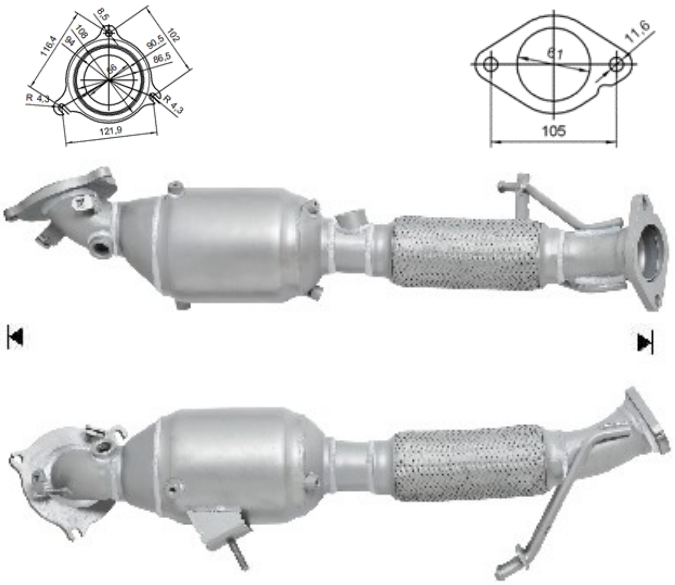
MAKE	MODEL	DATE
FORD	**GALAXY 1.6i 16V EcoBoost 1596 cc 118 Kw / 160 cv JTWA, JTWB**	11/10>4/15
FORD	MONDEO 1.6i 16V EcoBoost 1596 cc 118 Kw / 160 cv JTBA, JTBB	11/10>12/14
FORD	S-MAX 1.6i 16V EcoBoost 1596 cc 118 Kw / 160 cv JTWA, JTWB	11/10>4/15