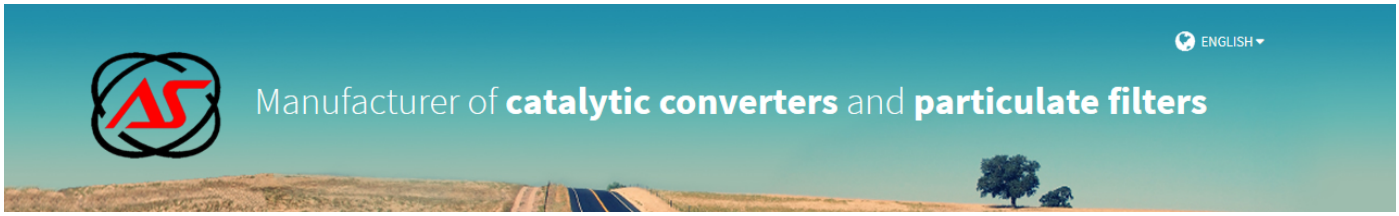

FORD

20459

PK1108 | OBD | 740 | 4.75 | Euro 5 | Euro 6 (1)

OE

1766306, 1770958, 1790029, 1843288, 1873837
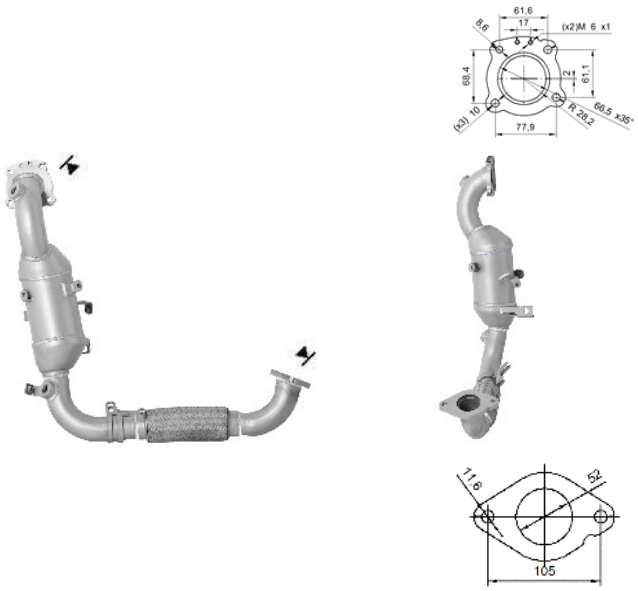
MAKE	MODEL	DATE
FORD	C-MAX 1.0i 12V EcoBoost 999 cc 74 Kw / 101 cv M2DA	10/12>6/15
FORD	C-MAX 1.0i 12V EcoBoost 999 cc 92 Kw / 125 cv M1DA	10/12>6/15
FORD	FOCUS 1.0i SCTi 12V EcoBoost 999 cc 74 Kw / 101 cv M2DA, M2DB, M2DC, SFDA,	3/12>7/15
FORD	FOCUS 1.0i SCTi 12V EcoBoost 999 cc 74 Kw / 101 cv M2DB, M2DC, SFDB (1)	10/14>7/15
FORD	FOCUS 1.0i SCTi 12V EcoBoost 999 cc 92 Kw / 125 cv M1DA, M1DC	3/12>7/15
FORD	**FOCUS 1.0i SCTi 12V EcoBoost 999 cc 92 Kw / 125 cv M1DC, M1DD** (1)	9/14>7/15
FORD	MONDEO 1.0i 12V TI-VCT EcoBoost 999 cc 92 Kw / 125 cv M1CA	10/14>6/16
FORD	MONDEO 1.0i 12V TI-VCT EcoBoost 999 cc 92 Kw / 125 cv M1CB (1)	10/14>6/16
FORD	TOURNEO CONNECT 1.0i 12V EcoBoost 999 cc 74 Kw / 101 cv B3GA, M2GA, M2GB	10/13>6/15
FORD	TOURNEO CONNECT 1.0i 12V EcoBoost 999 cc 74 Kw / 101 cv M2GB (1)	1/14>6/15
FORD	TRANSIT CONNECT 1.0i 12V EcoBoost 999 cc 74 Kw / 101 cv M2GB (1)	1/14>6/15
FORD	TRANSIT CONNECT 1.0i 12V EcoBoost 999 cc 74 Kw / 101 cv B3GA, M2GA, M2GB	10/13>6/15