TOYOTA

FD5175

PK1314 | 1300 | 10.60

Original-Artikelnummer.:

174100L040

MARKE	MODELL	DATUM
TOYOTA	HILUX 2.5TD D4D DPF 2494 cc 106 Kw / 144 cv 2KDFTV	7/11>11/15
TOYOTA	**HILUX 3.0TD D4D DPF 2982 cc 120 Kw / 163 cv 1KDFTV**	7/11>11/15
TOYOTA	HILUX 3.0TD D4D DPF 2982 cc 126 Kw / 171 cv 1KDFTV	7/11>11/15
TOYOTA	HILUX 3.0TD D4D DPF 2982 cc 145 Kw / 197 cv 1KDFTV	7/11>11/15

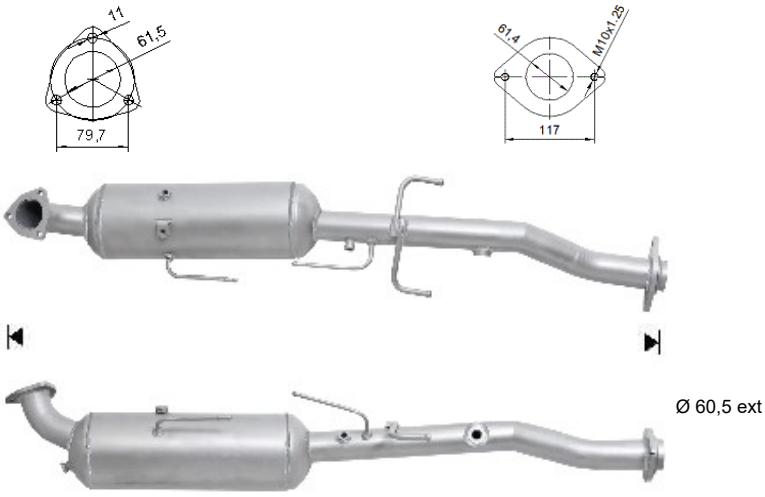

Ø 60,5 ext