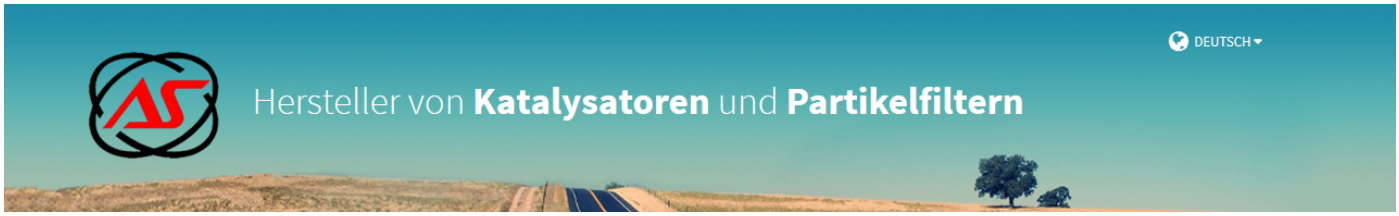

AUDI, SEAT, SKODA, VOLKSWAGEN

FM5149Q

KIT PK1268 | OBD | mm. 350 | Kg. 8.30 | Euro 6

Original-Artikelnummer.:

04L131606G, 04L131648X, 04L131670GX, 04L131671FX, 04L131671PX, 04L131673X, 04L131678CX, 04L131678GX, 04L131678PX, 04L131679X

MARKE	MODELL	DATUM
AUDI	A3 2.0TDI DPF 1968 cc 81 Kw / 110 cv DEJB	9/12>10/20
AUDI	A3 2.0TDI DPF 1968 cc 110 Kw / 150 cv CRUA, DEJA	9/12>10/20
AUDI	A3 35 2.0TDI DPF 1968 cc 110 Kw / 150 cv CRUA, DEJA	9/15>10/20
AUDI	Q2 35 2.0TDI DPF 1968 cc 110 Kw / 150 cv CRUA, DFGA	9/16>6/20
AUDI	Q2 Quattro 35 2.0TDI DPF 1968 cc 110 Kw / 150 cv CRUA, DFGA	9/16>6/20
AUDI	Q3 2.0TDI DPF 1968 cc 88 Kw / 120 cv CUVD, DFTC	11/14>10/18
AUDI	Q3 2.0TDI DPF 1968 cc 100 Kw / 136 cv CUVB, DFTB	11/14>10/18
AUDI	Q3 2.0TDI DPF 1968 cc 110 Kw / 150 cv CUVC, DFTA	11/14>10/18
AUDI	Q3 Quattro 2.0TDI DPF 1968 cc 110 Kw / 150 cv CUVC, DFTA	11/14>10/18
AUDI	Q3 2.0TDI DPF 1968 cc 135 Kw / 184 cv CUWA, DFUA	11/14>10/18
AUDI	Q3 Quattro 2.0TDI DPF 1968 cc 135 Kw / 184 cv CUWA, DFUA	11/14>10/18
SEAT	ALHAMBRA 2.0TDI DPF 1968 cc 85 Kw / 116 cv CUVA, DFLD, DLTC	5/12>
SEAT	ALHAMBRA 2.0TDI DPF 1968 cc 110 Kw / 150 cv CUVC, DFLA, DLTA	5/15>
SEAT	ALHAMBRA 2.0TDI DPF 1968 cc 130 Kw / 177 cv DLUB	11/12>
SEAT	ALHAMBRA 2.0TDI DPF 1968 cc 135 Kw / 184 cv CUWA, DFMA	2/15>
SEAT	ATECA 2.0TDI DPF 1968 cc 81 Kw / 110 cv CRVA	10/16>
SEAT	ATECA 2.0TDI DPF 1968 cc 110 Kw / 150 cv DFFA	4/16>
SKODA	KAROQ 2.0TDI DPF 1968 cc 110 Kw / 150 cv DFFA	7/17>
SKODA	**KAROQ 2.0TDI DPF 1968 cc 140 Kw / 190 cv DFHA**	7/17>
VOLKSWAGEN	CADDY 2.0TDI DPF 1968 cc 55 Kw / 75 cv CUUF, DFSC, DFSF	5/15>9/20
VOLKSWAGEN	CADDY 2.0TDI DPF 1968 cc 75 Kw / 102 cv CUUD, DFSD	5/15>9/20
VOLKSWAGEN	CADDY 2.0TDI DPF 1968 cc 90 Kw / 122 cv CUUE, DFSE	5/15>9/20
VOLKSWAGEN	CADDY 2.0TDI DPF 1968 cc 110 Kw / 150 cv CUUB, DFSB	5/15>9/20
VOLKSWAGEN	GOLF VII 2.0TDI DPF 1968 cc 81 Kw / 110 cv DEJB	11/12>
VOLKSWAGEN	GOLF VII 2.0TDI DPF 1968 cc 110 Kw / 150 cv DEJA	8/12>
VOLKSWAGEN	SHARAN 2.0TDI DPF 1968 cc 85 Kw / 116 cv CUVA, DFLD, DLTC	5/15>7/19
VOLKSWAGEN	SHARAN 2.0TDI DPF 1968 cc 110 Kw / 150 cv CUVC, DFLA, DLTA	5/15>
VOLKSWAGEN	SHARAN 2.0TDI DPF 1968 cc 130 Kw / 177 cv DLUB	5/15>
VOLKSWAGEN	SHARAN 2.0TDI DPF 1968 cc 135 Kw / 184 cv CUWA, DFMA	5/15>
VOLKSWAGEN	TIGUAN 2.0TDI DPF 1968 cc 81 Kw / 110 cv CUVE	7/11>8/18
VOLKSWAGEN	TIGUAN 2.0TDI DPF 1968 cc 110 Kw / 150 cv CUVC	5/15>8/18
VOLKSWAGEN	TIGUAN 2.0TDI DPF 1968 cc 135 Kw / 184 cv CUWA	5/15>8/18
VOLKSWAGEN	T-ROC 2.0TDI DPF 1968 cc 110 Kw / 150 cv DFFA	9/17>

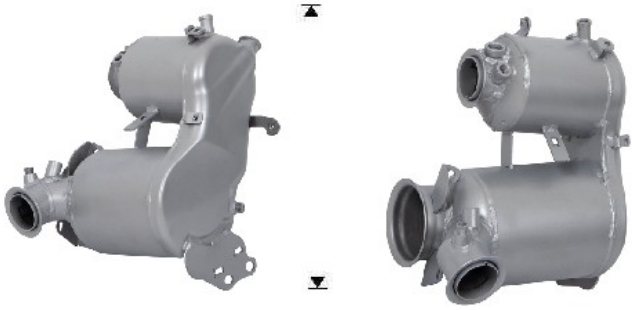

Ø 77x140°
Ø 54,8 ext.

Ø 111x140°

Ø 77x140°
Ø 54,8 ext.