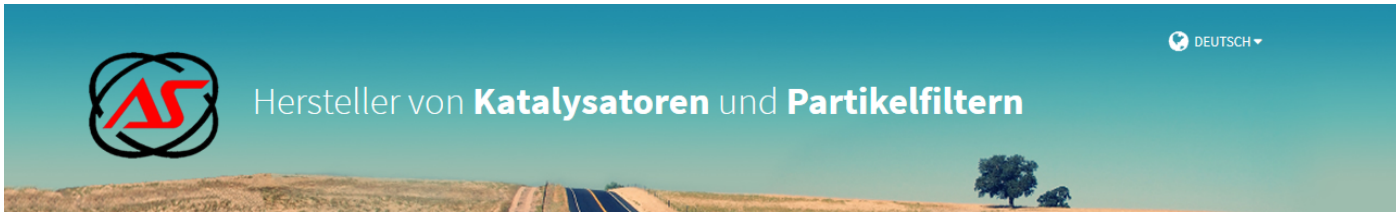

MITSUBISHI

FD1052Q

PK1083 | 820 | 7.20

Original-Artikelnummer.:

1583A006
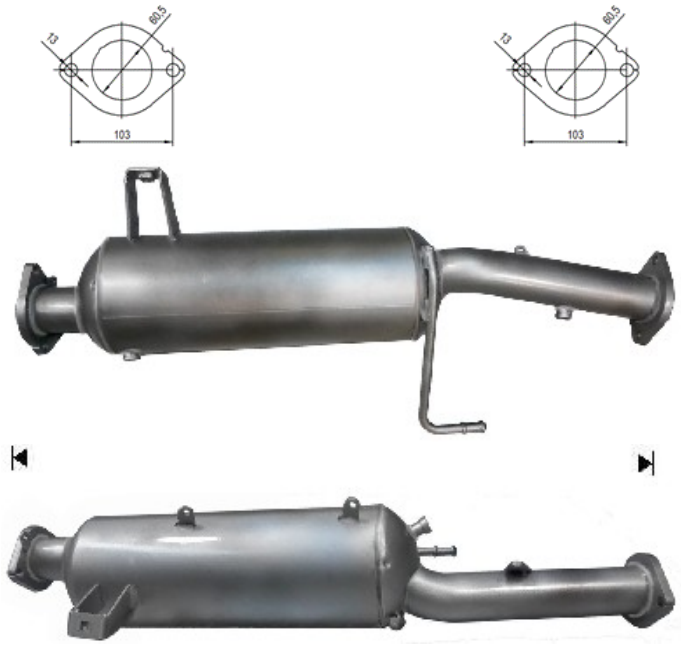
MARKE	MODELL	DATUM
MITSUBISHI	MONTERO 3.2TD DID DPF 3200 cc 118 Kw / 160 cv 4M41	11/06>8/08
MITSUBISHI	MONTERO 3.2TD DID DPF 3200 cc 125 Kw / 170 cv 4M41	11/06>8/08
MITSUBISHI	MONTERO 3.2TD DID DPF 3200 cc 140 Kw / 190 cv 4M41	11/06>8/08
MITSUBISHI	PAJERO 3.2TD DID DPF 3200 cc 118 Kw / 160 cv 4M41	11/06>8/08
MITSUBISHI	PAJERO 3.2TD DID DPF 3200 cc 125 Kw / 170 cv 4M41	11/06>8/08
MITSUBISHI	**PAJERO 3.2TD DID DPF 3200 cc 140 Kw / 190 cv 4M41**	11/06>8/08
MITSUBISHI	SHOGUN 3.2TD DID DPF 3200 cc 118 Kw / 160 cv 4M41	11/06>8/08
MITSUBISHI	SHOGUN 3.2TD DID DPF 3200 cc 125 Kw / 170 cv 4M41	11/06>8/08
MITSUBISHI	SHOGUN 3.2TD DID DPF 3200 cc 140 Kw / 190 cv 4M41	11/06>8/08