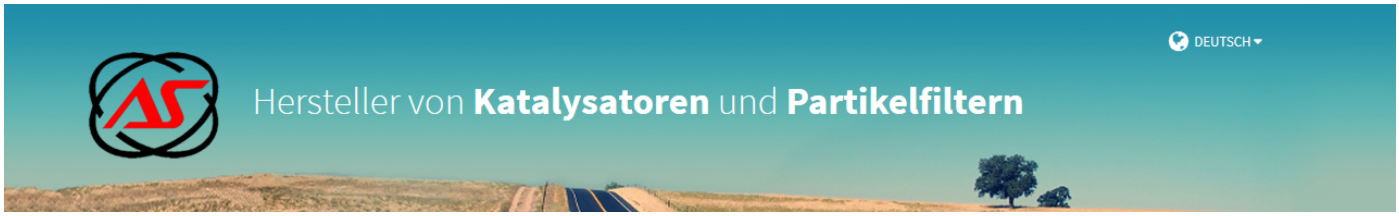


MITSUBISHI

# FD1052Q

KIT OBD mm. Kg. Auto

PK1083 820 7.20

Original-Artikelnummer.:

1583A006
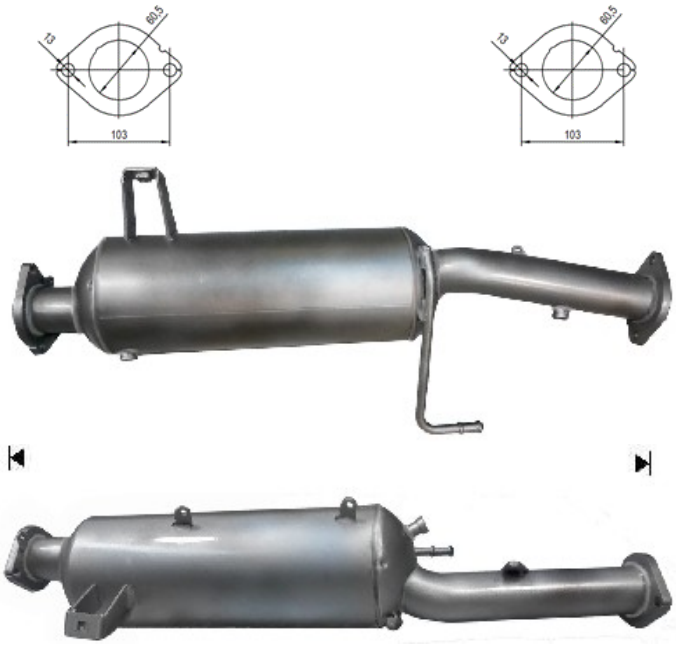
| MARKE | MODELL | DATUM |
|---|---|---|
| **MITSUBISHI** | MONTERO 3.2TD DID DPF 3200 cc 118 Kw / 160 cv 4M41 | 11/06>8/08 |
| **MITSUBISHI** | **MONTERO 3.2TD DID DPF 3200 cc 125 Kw / 170 cv 4M41** | 11/06>8/08 |
| **MITSUBISHI** | MONTERO 3.2TD DID DPF 3200 cc 140 Kw / 190 cv 4M41 | 11/06>8/08 |
| **MITSUBISHI** | PAJERO 3.2TD DID DPF 3200 cc 118 Kw / 160 cv 4M41 | 11/06>8/08 |
| **MITSUBISHI** | PAJERO 3.2TD DID DPF 3200 cc 125 Kw / 170 cv 4M41 | 11/06>8/08 |
| **MITSUBISHI** | PAJERO 3.2TD DID DPF 3200 cc 140 Kw / 190 cv 4M41 | 11/06>8/08 |
| **MITSUBISHI** | SHOGUN 3.2TD DID DPF 3200 cc 118 Kw / 160 cv 4M41 | 11/06>8/08 |
| **MITSUBISHI** | SHOGUN 3.2TD DID DPF 3200 cc 125 Kw / 170 cv 4M41 | 11/06>8/08 |
| **MITSUBISHI** | SHOGUN 3.2TD DID DPF 3200 cc 140 Kw / 190 cv 4M41 | 11/06>8/08 |