MERCEDES

# FD1002Q

PK964 | OBD | 660 | 6.00

Original-Artikelnummer.:

9064900592, 9064900992

| MARKE | MODELL | DATUM |
|---|---|---|
| **MERCEDES** | SPRINTER 209 2.1TD CDI DPF 2148 cc 65 Kw / 88 cv 646984 (906) | 2/06>12/09 |
| **MERCEDES** | SPRINTER 309 2.1TD CDI DPF 2148 cc 65 Kw / 88 cv 696984 (906) | 2/06>12/09 |
| **MERCEDES** | SPRINTER 509 2.1TD CDI DPF 2148 cc 65 Kw / 88 cv 696984 (906) | 2/06>12/09 |
| **MERCEDES** | SPRINTER 211 2.1TD CDI DPF 2148 cc 80 Kw / 109cv 646985 (906) | 2/06>12/09 |
| **MERCEDES** | SPRINTER 311 2.1TD CDI DPF 2148 cc 80 Kw / 109cv 646985 (906) | 2/06>12/09 |
| **MERCEDES** | SPRINTER 411 2.1TD CDI DPF 2148 cc 80 Kw / 109cv 646985 (906) | 2/06>12/09 |
| **MERCEDES** | SPRINTER 511 2.1TD CDI DPF 2148 cc 80 Kw / 109cv 646985 (906) | 2/06>12/09 |
| **MERCEDES** | SPRINTER 213 2.1TD CDI DPF 2148 cc 95 Kw / 129 cv 646986 (906) | 2/06>12/09 |
| **MERCEDES** | SPRINTER 313 2.1TD CDI DPF 2148 cc 95 Kw / 129 cv 646986 (906) | 2/06>12/09 |
| **MERCEDES** | **SPRINTER 513 2.1TD CDI DPF 2148 cc 95 Kw / 129 cv 646986 (906)** | 2/06>12/09 |
| **MERCEDES** | SPRINTER 215 2.1TD CDI DPF 2148 cc 110 Kw / 150 cv 646986, 646989, 646990 | 2/06>12/09 |
| **MERCEDES** | SPRINTER 315 2.1TD CDI DPF 2148 cc 110 Kw / 150 cv 646986, 646989, 646990 | 2/06>12/09 |
| **MERCEDES** | SPRINTER 415 2.1TD CDI DPF 2148 cc 110 Kw / 150 cv 646986, 646989, 646990 | 2/06>12/09 |
| **MERCEDES** | SPRINTER 515 2.1TD CDI DPF 2148 cc 110 Kw / 150 cv 646986, 646989, 646990 | 2/06>12/09 |

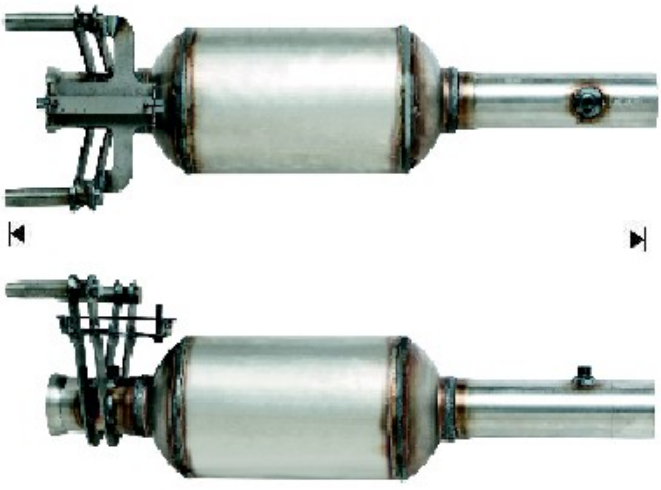

Ø 59,8 ext