MAZDA

FD5036

PK1249 | OBD | 1300 | 10.10

Original-Artikelnummer.:

R2YE2055X, R2YE2055XA, RFY82055XA

MARKE	MODELL	DATUM
MAZDA	6 2.0TD DITD DPF 1998 cc 103 Kw / 140 cv MZR-CD20 (RF)	8/07>12/10
MAZDA	6 2.2TD CDVI DPF 2184 cc 92 Kw / 125 cv MZR-CD22 (R2)	1/09>11/09
MAZDA	6 2.2TD CDVI DPF 2184 cc 120 Kw / 163 cv MZR-CD22 (R2)	11/08>11/09
MAZDA	**6 2.2TD CDVI DPF 2184 cc 136 Kw / 185 cv MZR-CD22 (R2)**	11/08>11/09

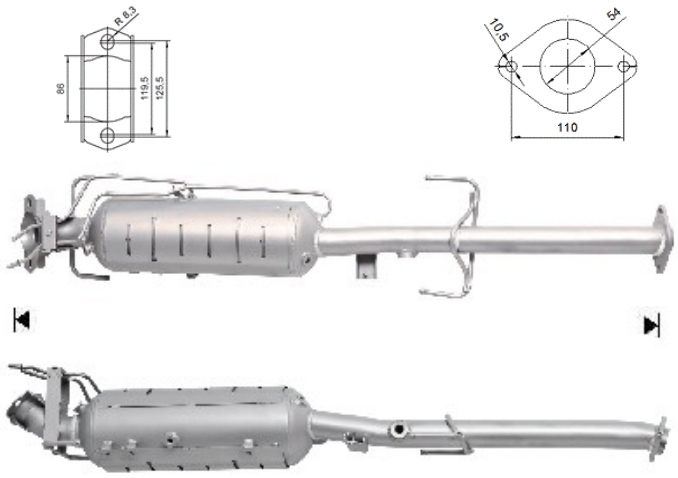

Ø 53,5 ext