HYUNDAI, KIA

# FD5054Q

PK918 | OBD | mm. 440 | Kg. 5.90 | Euro 5

Original-Artikelnummer.:
289902A760, 289902A770
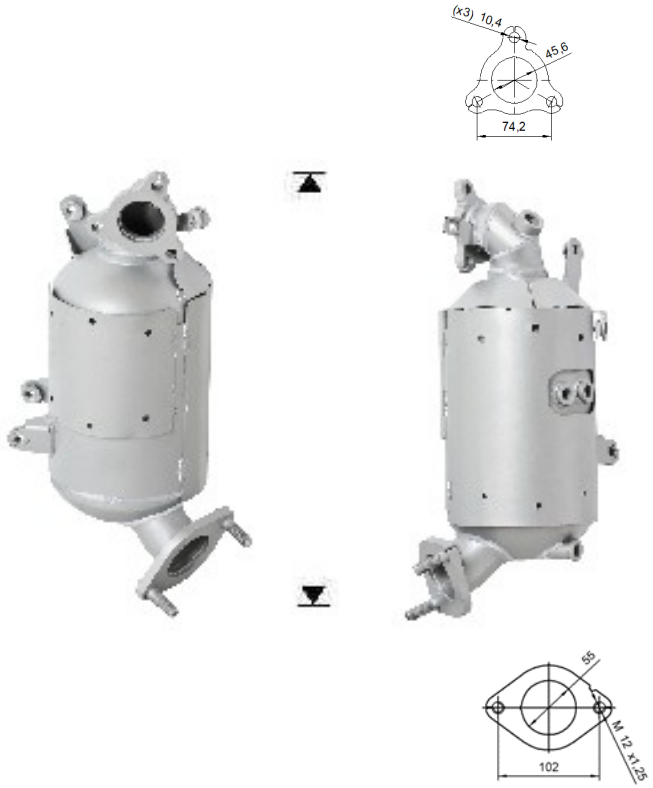
| MARKE | MODELL | DATUM |
|---|---|---|
| HYUNDAI | i40 1.7TD CRDI DPF 1685 cc 85 Kw / 116 cv D4FD | 4/11>1/15 |
| HYUNDAI | i40 1.7TD CRDI DPF 1685 cc 100 Kw / 136 cv D4FD | 4/11>1/15 |
| HYUNDAI | IX 35 1.7TD CRDI DPF 1685 cc 85 Kw / 116 cv D4FD | 1/10>6/15 |
| **KIA** | CARENS 1.7TD CRDI DPF 1685 cc 85 Kw / 116 cv D4FD | 12/12>8/16 |
| **KIA** | CARENS 1.7TD CRDI DPF 1685 cc 100 Kw / 136 cv D4FD | 12/12>8/16 |
| **KIA** | **OPTIMA 1.7TD CRDI DPF 1685 cc 100 Kw / 136 cv D4FD** | 9/11>6/15 |
| **KIA** | SPORTAGE 1.7TD CRDI DPF 1685 cc 85 Kw / 116 cv D4FD | 7/10>12/15 |