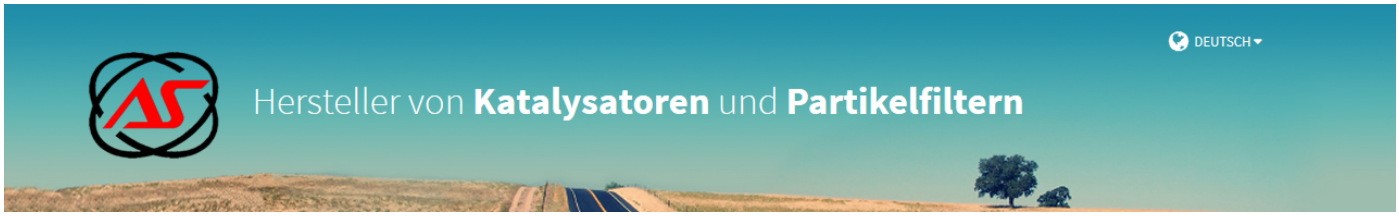

JAGUAR, LAND ROVER

FD5308

PK1469 | OBD | 600 | 6.50 | Euro 6

Original-Artikelnummer.:

LR082723, LR107797, LR111132, T2H15405, T2H34934, T2H36521, T2H6562

MARKE	MODELL	DATUM
JAGUAR	F-PACE 2.0TD DPF 1999 cc 132 Kw / 180 cv 204DTD >|Ch Nº JA99999	9/15>
JAGUAR	XE 2.0TD DPF 1999 cc 132 Kw / 180 cv 204DTD >|Ch Nº JCP43027	3/15>
JAGUAR	**XF 2.0TD DPF 1999 cc 120 Kw / 163 cv 204DTD >|Ch Nº KCY73375**	7/17>
JAGUAR	XF 2.0TD DPF 1999 cc 132 Kw / 180 cv 204DTD >|Ch Nº KCY73375	5/15>
JAGUAR	XF 2.0TD DPF 1999 cc 177 Kw / 241 cv 204DTA >|Ch Nº KCY73375	2/17>
LAND ROVER	DISCOVERY 2.0TD DPF 1999 cc 132 Kw / 180 cv 204DTD >|Ch Nº JA99999	9/16>
LAND ROVER	RANGE ROVER VELAR 2.0TD DPF 1999 cc 132 Kw / 180 cv 204DTD >|Ch Nº	3/17>
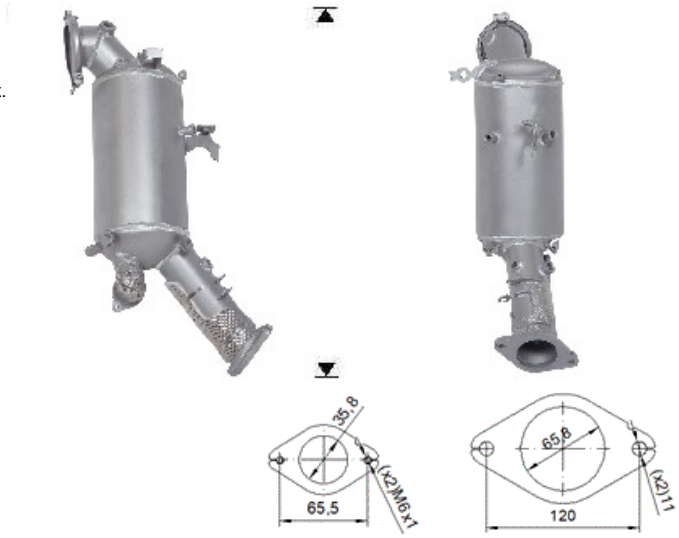
Ø 96x120° ext.