

IVECO

FD5092Q

PK1229 | OBD | 635 | 11.60 | Euro 5

Original-Artikelnummer.:

5801317169, 5801376711, 5801424200, 5801439526

MARKE	MODELL	DATUM
IVECO	DAILY 29 2.3TD DPF 2287 cc 78 Kw / 106 cv F1AE3481A	9/11>2/14
IVECO	DAILY 35 2.3TD DPF 2287 cc 78 Kw / 106 cv F1AE3481A	9/11>2/14
IVECO	DAILY 40 2.3TD DPF 2287 cc 78 Kw / 106 cv F1AE3481A	9/11>2/14
IVECO	DAILY 29 2.3TD DPF 2287 cc 93 Kw / 126 cv F1AE3481B	9/11>2/14
IVECO	DAILY 35 2.3TD DPF 2287 cc 93 Kw / 126 cv F1AE3481B	9/11>2/14
IVECO	DAILY 40 2.3TD DPF 2287 cc 93 Kw / 126 cv F1AE3481B	9/11>2/14
IVECO	DAILY 29 2.3TD DPF 2287 cc 107 Kw / 146 cv F1AE3481C	9/11>2/14
IVECO	DAILY 35 2.3TD DPF 2287 cc 107 Kw / 146 cv F1AE3481C	9/11>2/14
IVECO	DAILY 35 3.0TD DPF 2998 cc 107 Kw / 146 cv F1CE3481B, F1CE3481J	9/11>2/14
IVECO	DAILY 40 3.0TD DPF 2998 cc 107 Kw / 146 cv F1CE3481B, F1CE3481J	9/11>2/14
IVECO	DAILY 45 3.0TD DPF 2998 cc 107 Kw / 146 cv F1CE3481B, F1CE3481J	9/11>2/14
IVECO	DAILY 50 3.0TD DPF 2998 cc 107 Kw / 146 cv F1CE3481B, F1CE3481J	9/11>2/14
IVECO	DAILY 60 3.0TD DPF 2998 cc 107 Kw / 146 cv F1CE3481B, F1CE3481J	9/11>2/14
IVECO	DAILY 65 3.0TD DPF 2998 cc 107 Kw / 146 cv F1CE3481B, F1CE3481J	9/11>2/14
IVECO	DAILY 70 3.0TD DPF 2998 cc 107 Kw / 146 cv F1CE3481B, F1CE3481J	9/11>2/14
IVECO	DAILY 35 3.0TD DPF 2998 cc 125 Kw / 170 cv F1CE3481K	9/11>2/14
IVECO	DAILY 40 3.0TD DPF 2998 cc 125 Kw / 170 cv F1CE3481K	9/11>2/14
IVECO	DAILY 45 3.0TD DPF 2998 cc 125 Kw / 170 cv F1CE3481K	9/11>2/14
IVECO	DAILY 50 3.0TD DPF 2998 cc 125 Kw / 170 cv F1CE3481K	9/11>2/14
IVECO	DAILY 60 3.0TD DPF 2998 cc 125 Kw / 170 cv F1CE3481K	9/11>2/14
IVECO	DAILY 65 3.0TD DPF 2998 cc 125 Kw / 170 cv F1CE3481K	9/11>2/14
IVECO	DAILY 70 3.0TD DPF 2998 cc 125 Kw / 170 cv F1CE3481K	9/11>2/14
IVECO	DAILY 35 3.0TD DPF 2998 cc 150 Kw / 204 cv F1CE3481D	9/11>2/14
IVECO	DAILY 40 3.0TD DPF 2998 cc 150 Kw / 204 cv F1CE3481D	9/11>2/14
IVECO	DAILY 45 3.0TD DPF 2998 cc 150 Kw / 204 cv F1CE3481D	9/11>2/14
IVECO	DAILY 50 3.0TD DPF 2998 cc 150 Kw / 204 cv F1CE3481D	9/11>2/14
IVECO	DAILY 60 3.0TD DPF 2998 cc 150 Kw / 204 cv F1CE3481D	9/11>2/14
IVECO	DAILY 65 3.0TD DPF 2998 cc 150 Kw / 204 cv F1CE3481D	9/11>2/14
IVECO	**DAILY 70 3.0TD DPF 2998 cc 150 Kw / 204 cv F1CE3481D**	9/11>2/14

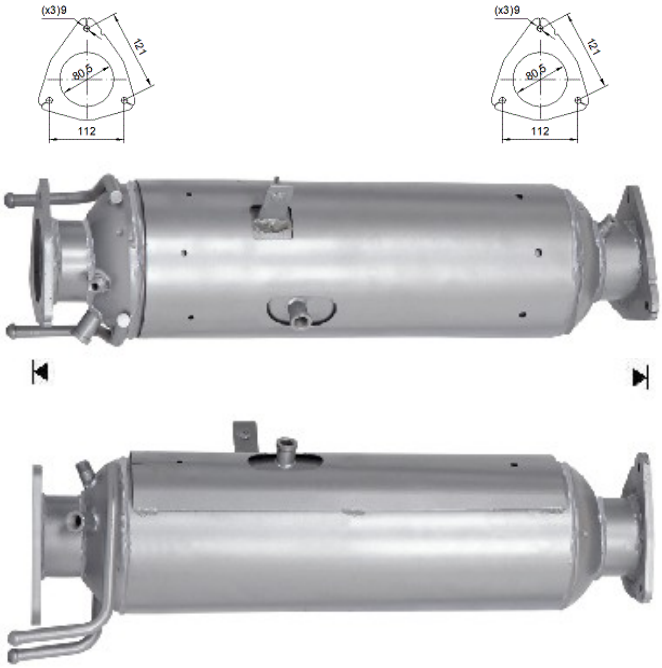
(x3)9
121
80.5
112
(x3)9
121
80.5
112