


IVECO

# FD5092Q

PK1229 | OBD | 635 | 11.60 | Euro 5

Original-Artikelnummer.:

5801317169, 5801376711, 5801424200, 5801439526

| MARKE | MODELL | DATUM |
|---|---|---|
| **IVECO** | DAILY 29 2.3TD DPF 2287 cc 78 Kw / 106 cv F1AE3481A | 9/11>2/14 |
| **IVECO** | DAILY 35 2.3TD DPF 2287 cc 78 Kw / 106 cv F1AE3481A | 9/11>2/14 |
| **IVECO** | DAILY 40 2.3TD DPF 2287 cc 78 Kw / 106 cv F1AE3481A | 9/11>2/14 |
| **IVECO** | DAILY 29 2.3TD DPF 2287 cc 93 Kw / 126 cv F1AE3481B | 9/11>2/14 |
| **IVECO** | DAILY 35 2.3TD DPF 2287 cc 93 Kw / 126 cv F1AE3481B | 9/11>2/14 |
| **IVECO** | DAILY 40 2.3TD DPF 2287 cc 93 Kw / 126 cv F1AE3481B | 9/11>2/14 |
| **IVECO** | DAILY 29 2.3TD DPF 2287 cc 107 Kw / 146 cv F1AE3481C | 9/11>2/14 |
| **IVECO** | DAILY 35 2.3TD DPF 2287 cc 107 Kw / 146 cv F1AE3481C | 9/11>2/14 |
| **IVECO** | DAILY 35 3.0TD DPF 2998 cc 107 Kw / 146 cv F1CE3481B, F1CE3481J | 9/11>2/14 |
| **IVECO** | DAILY 40 3.0TD DPF 2998 cc 107 Kw / 146 cv F1CE3481B, F1CE3481J | 9/11>2/14 |
| **IVECO** | DAILY 45 3.0TD DPF 2998 cc 107 Kw / 146 cv F1CE3481B, F1CE3481J | 9/11>2/14 |
| **IVECO** | DAILY 50 3.0TD DPF 2998 cc 107 Kw / 146 cv F1CE3481B, F1CE3481J | 9/11>2/14 |
| **IVECO** | DAILY 60 3.0TD DPF 2998 cc 107 Kw / 146 cv F1CE3481B, F1CE3481J | 9/11>2/14 |
| **IVECO** | DAILY 65 3.0TD DPF 2998 cc 107 Kw / 146 cv F1CE3481B, F1CE3481J | 9/11>2/14 |
| **IVECO** | DAILY 70 3.0TD DPF 2998 cc 107 Kw / 146 cv F1CE3481B, F1CE3481J | 9/11>2/14 |
| **IVECO** | DAILY 35 3.0TD DPF 2998 cc 125 Kw / 170 cv F1CE3481K | 9/11>2/14 |
| **IVECO** | DAILY 40 3.0TD DPF 2998 cc 125 Kw / 170 cv F1CE3481K | 9/11>2/14 |
| **IVECO** | DAILY 45 3.0TD DPF 2998 cc 125 Kw / 170 cv F1CE3481K | 9/11>2/14 |
| **IVECO** | DAILY 50 3.0TD DPF 2998 cc 125 Kw / 170 cv F1CE3481K | 9/11>2/14 |
| **IVECO** | DAILY 60 3.0TD DPF 2998 cc 125 Kw / 170 cv F1CE3481K | 9/11>2/14 |
| **IVECO** | DAILY 65 3.0TD DPF 2998 cc 125 Kw / 170 cv F1CE3481K | 9/11>2/14 |
| **IVECO** | DAILY 70 3.0TD DPF 2998 cc 125 Kw / 170 cv F1CE3481K | 9/11>2/14 |
| **IVECO** | DAILY 35 3.0TD DPF 2998 cc 150 Kw / 204 cv F1CE3481D | 9/11>2/14 |
| **IVECO** | DAILY 40 3.0TD DPF 2998 cc 150 Kw / 204 cv F1CE3481D | 9/11>2/14 |
| **IVECO** | DAILY 45 3.0TD DPF 2998 cc 150 Kw / 204 cv F1CE3481D | 9/11>2/14 |
| **IVECO** | **DAILY 50 3.0TD DPF 2998 cc 150 Kw / 204 cv F1CE3481D** | 9/11>2/14 |
| **IVECO** | DAILY 60 3.0TD DPF 2998 cc 150 Kw / 204 cv F1CE3481D | 9/11>2/14 |
| **IVECO** | DAILY 65 3.0TD DPF 2998 cc 150 Kw / 204 cv F1CE3481D | 9/11>2/14 |
| **IVECO** | DAILY 70 3.0TD DPF 2998 cc 150 Kw / 204 cv F1CE3481D | 9/11>2/14 |

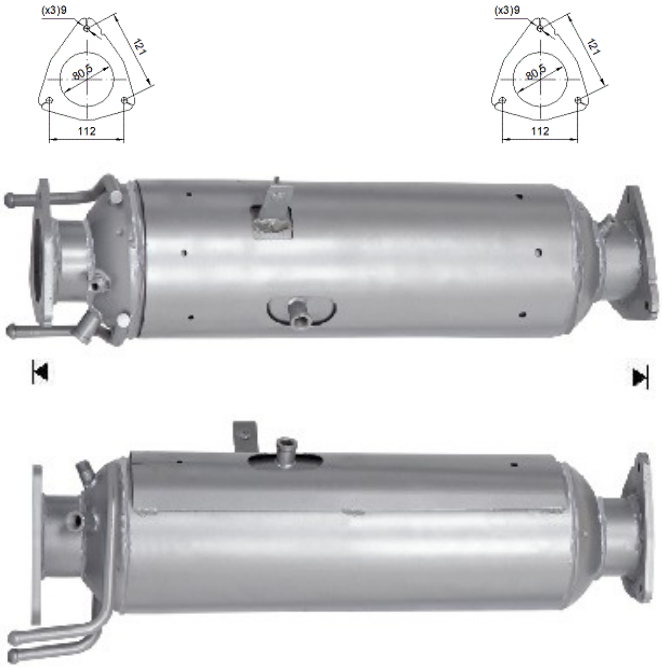
(x3)9
121
80.5
112
(x3)9
121
80.5
112