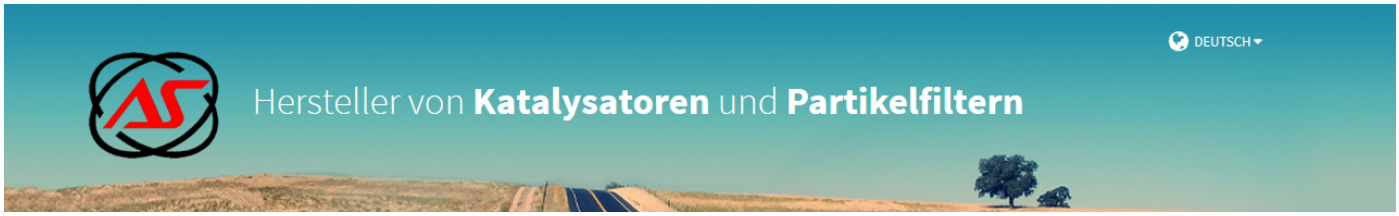

FORD

FD5101

PK1168 1000 8.00

Original-Artikelnummer.:

1675177, 1698644, 1712125, 1765160, 1794146, 1794147, 1822951, 1859397, 1860291, 1885745, 1899411, 2879934
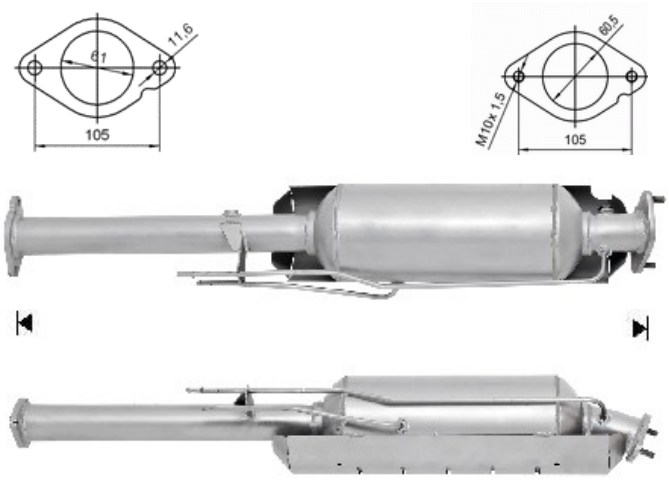
MARKE	MODELL	DATUM
FORD	GALAXY 2.0TD TDCI DPF 1997 cc 85 Kw / 116 cv KLWA, TYWA	3/10>4/15
FORD	GALAXY 2.0TD TDCI DPF 1997 cc 100 Kw / 136 cv UKWA	3/10>4/15
FORD	GALAXY 2.0TD TDCI DPF 1997 cc 103 Kw / 140 cv UFWA	3/10>4/15
FORD	**GALAXY 2.0TD TDCI DPF 1997 cc 120 Kw / 163 cv TXWA**	3/10>4/15
FORD	GALAXY 2.2TD TDCI DPF 2179 cc 147 Kw / 200 cv KNWA	11/10>4/15
FORD	MONDEO 2.0TD TDCI DPF 1997 cc 85 Kw / 116 cv KLBA, LPBA, TYBA	3/10>12/14
FORD	MONDEO 2.0TD TDCI DPF 1997 cc 100 Kw / 136 cv UKBA, UKBB	3/10>12/14
FORD	MONDEO 2.0TD TDCI DPF 1997 cc 103 Kw / 140 cv UFBA, UFBB	3/10>12/14
FORD	MONDEO 2.0TD TDCI DPF 1997 cc 120 Kw / 163 cv TXBA, TXBB	3/10>12/14
FORD	MONDEO 2.2TD TDCI DPF 2179 cc 147 Kw / 200 cv KNBA	11/10>12/14
FORD	S-MAX 2.0TD TDCI DPF 1997 cc 85 Kw / 116 cv KLWA, TYWA	3/10>4/15
FORD	S-MAX 2.0TD TDCI DPF 1997 cc 100 Kw / 136 cv UKWA	3/10>4/15
FORD	S-MAX 2.0TD TDCI DPF 1997 cc 103 Kw / 140 cv UFWA	3/10>4/15
FORD	S-MAX 2.0TD TDCI DPF 1997 cc 120 Kw / 163 cv TXWA	3/10>4/15
FORD	S-MAX 2.2TD TDCI DPF 2179 cc 147 Kw / 200 cv KNWA	11/10>4/15