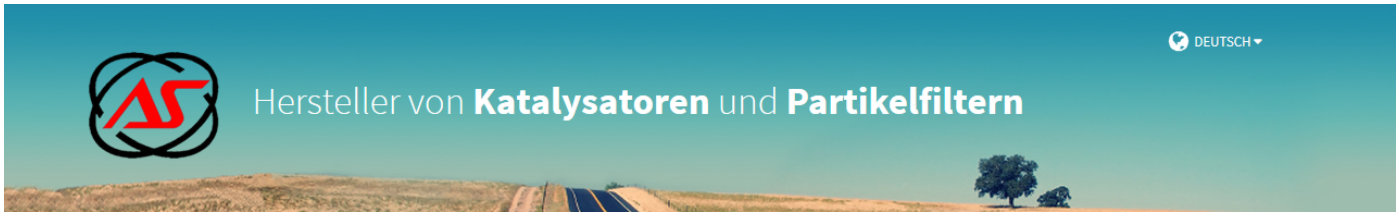


ALFA ROMEO, CHRYSLER JEEP, FIAT

# FM5345Q

PK1474 | OBD | 700 | 8.70 | Euro 6

Original-Artikelnummer.:
52166324, 52193976
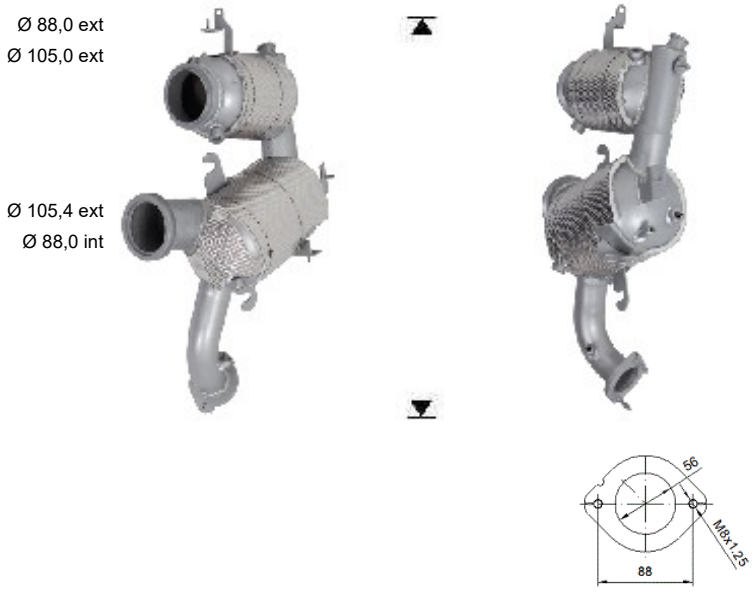
| MARKE | MODELL | DATUM |
|---|---|---|
| ALFA ROMEO | TONALE 1.6TD VGTD DPF 1598 cc 96 Kw / 131 cv 46346020 | 9/22> |
| **CHRYSLER JEEP** | **COMPASS 1.6TD MJTD DPF 1598 cc 96 Kw / 131 cv 46346020** | 4/21> |
| **CHRYSLER JEEP** | RENEGADE 1.6TD MJTD DPF 1598 cc 96 Kw / 131 cv 46346020 | 2/20> |
| FIAT | 500X 1.6TD MJTD DPF 1598 cc 84 Kw / 114 cv 55260384, 55280444 | 10/19> |
| FIAT | 500X 1.6TD MJTD DPF 1598 cc 88 Kw / 120 cv 55260384, 55280444 | 10/19> |
| FIAT | 500X 1.6TD MJTD DPF 1598 cc 96 Kw / 131 cv 46346020 | 1/21> |
| FIAT | DOBLÓ 1.6TD MJTD DPF 1598 cc 74 Kw / 101 cv 263A3000, 263A9000, 55280444 | 1/19> |
| FIAT | DOBLÓ 1.6TD MJTD DPF 1598 cc 88 Kw / 120 cv 46346020, 55280444 | 1/19> |
| FIAT | TIPO 1.6TD MJTD DPF 1598 cc 96 Kw / 131 cv 46346020 | 11/20> |