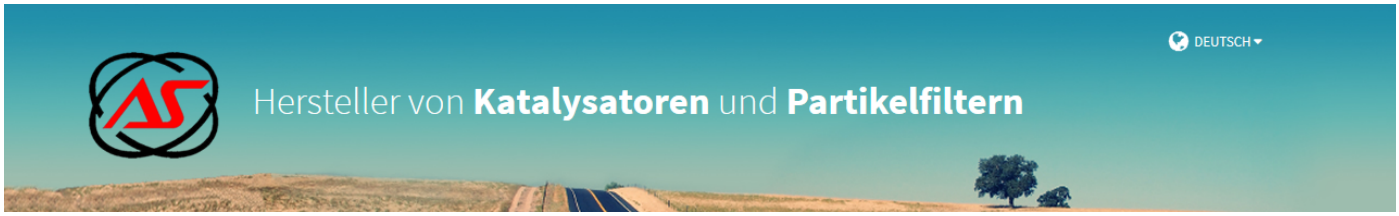

BMW, BMW-MINI

FL5294Q

PK1435 650 10.30

Original-Artikelnummer.:
18328589895, 18328599689

MARKE	MODELL	DATUM
BMW	118D 2.0TD DPF 1995 cc 100 Kw / 136 cv B47C20B (B47B) F40	7/19>
BMW	118D 2.0TD DPF 1995 cc 110 Kw / 150 cv B47C20B (B47B) F40	7/19>
BMW	120D 2.0TD DPF 1995 cc 140 Kw / 190 cv B47C20B (B47B) F40	3/20>
BMW	120XD 2.0TD DPF 1995 cc 140 Kw / 190 cv B47C20B (B47B) F40	7/19>
BMW	218D 2.0TD DPF 1995 cc 100 Kw / 136 cv B47C20B (B47B) F44, F45, F46	11/17>
BMW	218D 2.0TD DPF 1995 cc 110 Kw / 150 cv B47C20B (B47B) F44, F45, F46	11/17>
BMW	218XD 2.0TD DPF 1995 cc 100 Kw / 136 cv B47C20B (B47B) F45, F46	11/17>
BMW	218XD 2.0TD DPF 1995 cc 110 Kw / 150 cv B47C20B (B47B) F45, F46	11/17>
BMW	220D 2.0TD DPF 1995 cc 120 Kw / 163 cv B47C20B (B47D) F44, F45, F46	11/17>
BMW	220D 2.0TD DPF 1995 cc 140 Kw / 190 cv B47C20B (B47D) F44, F45, F46	11/17>
BMW	220XD 2.0TD DPF 1995 cc 120 Kw / 163 cv B47C20B (B47D) F45, F46	11/17>
BMW	220XD 2.0TD DPF 1995 cc 140 Kw / 190 cv B47C20B (B47D) F44, F45, F46	11/17>
BMW	X1 18Sd 2.0TD DPF 1995 cc 110 Kw / 150 cv B47C20B (B47B) F48	11/17>
BMW	X1 18Xd 2.0TD DPF 1995 cc 110 Kw / 150 cv B47C20B (B47B) F48	11/17>
BMW	X1 20Sd 2.0TD DPF 1995 cc 120 Kw / 163 cv B47C20B (B47D) F48	11/17>
BMW	X1 20Xd 2.0TD DPF 1995 cc 120 Kw / 163 cv B47C20B (B47D) F48	11/17>
BMW	X1 20Sd 2.0TD DPF 1995 cc 140 Kw / 190 cv B47C20B (B47D) F48	11/17>
BMW	X1 20Xd 2.0TD DPF 1995 cc 140 Kw / 190 cv B47C20B (B47D) F48	11/17>
BMW	X1 25Xd 2.0TD DPF 1995 cc 170 Kw / 231 cv B47C20B (B47E) F48	7/19>
BMW	X2 18Sd 2.0TD DPF 1995 cc 100 Kw / 136 cv B47C20B (B47B) F39	11/17>
BMW	X2 18Xd 2.0TD DPF 1995 cc 100 Kw / 136 cv B47C20B (B47B) F39	11/17>
BMW	X2 18Sd 2.0TD DPF 1995 cc 110 Kw / 150 cv B47C20B (B47B) F39	11/17>
BMW	X2 18Xd 2.0TD DPF 1995 cc 110 Kw / 150 cv B47C20B (B47B) F39	11/17>
BMW	X2 20Sd 2.0TD DPF 1995 cc 120 Kw / 163 cv B47C20B (B47D) F39	11/17>
BMW	X2 20Sd 2.0TD DPF 1995 cc 140 Kw / 190 cv B47C20B (B47D) F39	11/17>
BMW	X2 20Xd 2.0TD DPF 1995 cc 140 Kw / 190 cv B47C20B (B47D) F39	11/17>
BMW	X2 25Xd 2.0TD DPF 1995 cc 170 Kw / 231 cv B47C20B (B47E) F39	7/19>
BMW-MINI	CLUBMAN Cooper D 2.0TD DPF 1995 cc 100 Kw / 136 cv B47C20B (B47B) F54	11/17>
BMW-MINI	CLUBMAN Cooper D 2.0TD DPF 1995 cc 110 Kw / 150 cv B47C20B (B47B) F54	11/17>
BMW-MINI	CLUBMAN Cooper SD 2.0TD DPF 1995 cc 120 Kw / 163 cv B47C20B (B47D) F54	11/17>
BMW-MINI	**CLUBMAN Cooper SDX 2.0TD DPF 1995 cc 120 Kw / 163 cv B47C20B (B47D) F54**	11/17>
BMW-MINI	CLUBMAN Cooper SD 2.0TD DPF 1995 cc 140 Kw / 190 cv B47C20B (B47D) F54	11/17>
BMW-MINI	CLUBMAN Cooper SDX 2.0TD DPF 1995 cc 140 Kw / 190 cv B47C20B (B47D) F54	11/17>
BMW-MINI	COUNTRYMAN Cooper D 2.0TD DPF 1995 cc 110 Kw / 150 cv B47C20B (B47B) F60	11/17>
BMW-MINI	COUNTRYMAN Cooper SDX 2.0TD DPF 1995 cc 110 Kw / 150 cv B47C20B (B47B)	11/17>
BMW-MINI	COUNTRYMAN Cooper SD 2.0TD DPF 1995 cc 140 Kw / 190 cv B47C20B (B47D)	11/17>
BMW-MINI	COUNTRYMAN Cooper SDX 2.0TD DPF 1995 cc 140 Kw / 190 cv B47C20B (B47D)	11/17>

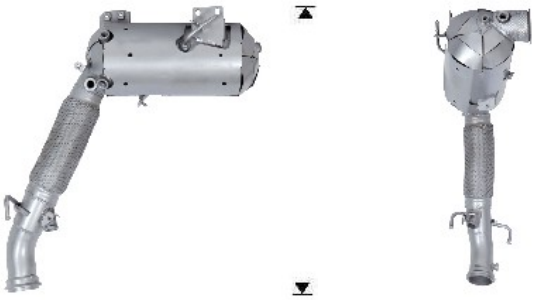

Ø 59,8 ext.
Ø 84x140°

Ø 65,5 int.
Ø 84,6 ext.