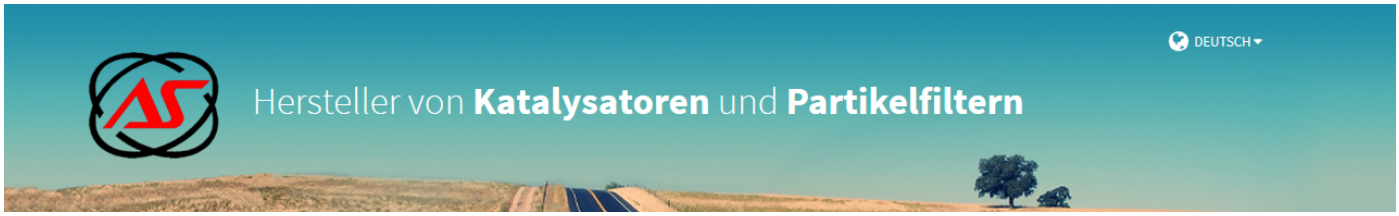

AUDI

FM5215Q

PK1426 | 350 | 8.30

Original-Artikelnummer.:

04L131601TX, 04L131669HX, 04L131670SX

MARKE	MODELL	DATUM
AUDI	A4 30 2.0TDI DPF 1968 cc 90 Kw / 122 cv DEUC	5/16>10/19
AUDI	A4 2.0TDI DPF 1968 cc 100 Kw / 136 cv CSUB, DEUB	11/12>10/19
AUDI	A4 2.0TDI DPF 1968 cc 110 Kw / 150 cv CSUA	11/12>12/15
AUDI	A4 35 2.0TDI DPF 1968 cc 110 Kw / 150 cv CZHA, DEUA	5/15>
AUDI	A4 2.0TDI DPF 1968 cc 120 Kw / 163 cv CNHC	11/12>12/15
AUDI	A4 2.0TDI DPF 1968 cc 140 Kw / 190 cv CNHA	9/13>12/15
AUDI	A4 40 2.0TDI DPF 1968 cc 140 Kw / 190 cv DESA, DETA, DFVA	5/15>
AUDI	A4 Quattro 2.0TDI DPF 1968 cc 100 Kw / 136 cv CSUB, DEUB	9/09>7/18
AUDI	A4 Quattro 2.0TDI DPF 1968 cc 110 Kw / 150 cv CSUA, DEUA	11/11>10/19
AUDI	A4 Quattro 2.0TDI DPF 1968 cc 120 Kw / 163 cv DETB	5/16>10/19
AUDI	A4 Quattro 2.0TDI DPF 1968 cc 140 Kw / 190 cv CNHA, DESA, DETA, DFVA	9/13>9/20
AUDI	A4 Quattro 40 2.0TDI DPF 1968 cc 140 Kw / 190 cv DESA, DETA, DFVA	9/15>
AUDI	A5 2.0TDI DPF 1968 cc 100 Kw / 136 cv CSUB, DEUB	11/11>8/18
AUDI	A5 2.0TDI DPF 1968 cc 110 Kw / 150 cv CSUA	5/13>12/19
AUDI	A5 35 2.0TDI DPF 1968 cc 110 Kw / 150 cv CZHA, DEUA	1/17>2/20
AUDI	A5 2.0TDI DPF 1968 cc 120 Kw / 163 cv CNHC	11/11>1/17
AUDI	A5 2.0TDI DPF 1968 cc 140 Kw / 190 cv CNHA	9/13>1/17
AUDI	A5 40 2.0TDI DPF 1968 cc 140 Kw / 190 cv DESA, DETA	6/16>
AUDI	**A5 Quattro 2.0TDI DPF 1968 cc 110 Kw / 150 cv CSUA, DEUA**	5/17>2/20
AUDI	A5 Quattro 2.0TDI DPF 1968 cc 140 Kw / 190 cv CNHA	9/13>1/17
AUDI	A5 Quattro 40 2.0TDI DPF 1968 cc 140 Kw / 190 cv DESA, DETA	8/16>
AUDI	A6 2.0TDI DPF 1968 cc 100 Kw / 136 cv CSUB, DDCB	1/12>9/18
AUDI	A6 2.0TDI DPF 1968 cc 110 Kw / 150 cv CSUA	9/14>9/18
AUDI	A6 2.0TDI DPF 1968 cc 140 Kw / 190 cv CNHA, CZJA, DDDA	11/13>9/18
AUDI	A6 Quattro 2.0TDI DPF 1968 cc 140 Kw / 190 cv CNHA, DDDA	4/15>9/18
AUDI	Q5 2.0TDI DPF 1968 cc 100 Kw / 136 cv CSUB, DEUB	11/11>11/20
AUDI	Q5 2.0TDI Quattro DPF 1968 cc 100 Kw / 136 cv CSUB	8/09>5/17
AUDI	Q5 2.0TDI DPF 1968 cc 110 Kw / 150 cv CSUA, DEUA	6/12>11/20
AUDI	Q5 2.0TDI Quattro DPF 1968 cc 110 Kw / 150 cv CSUA	11/12>5/17
AUDI	Q5 2.0TDI Quattro DPF 1968 cc 120 Kw / 163 cv CNHC	11/08>5/17
AUDI	Q5 35 2.0TDI DPF Mild Hybrid 1968 cc 120 Kw / 163 cv DTNA	4/21>
AUDI	Q5 35 2.0TDI Quattro DPF 1968 cc 120 Kw / 163 cv DETB	6/16>11/20
AUDI	Q5 2.0TDI DPF 1968 cc 140 Kw / 190 cv CNHA	9/15>5/17
AUDI	Q5 2.0TDI Quattro DPF 1968 cc 140 Kw / 190 cv CNHA	4/14>5/17
AUDI	Q5 40 2.0TDI Quattro DPF 1968 cc 140 Kw / 190 cv DESA, DETA	6/16>
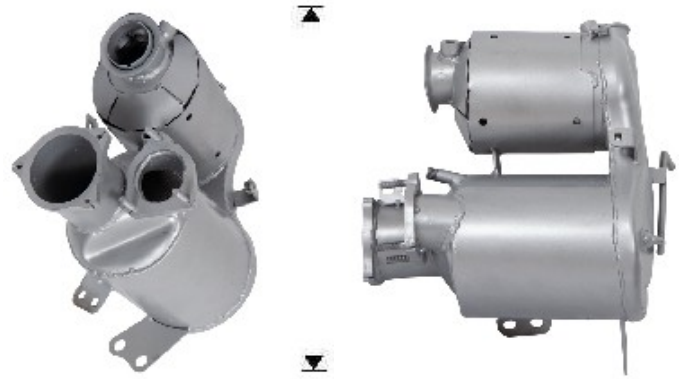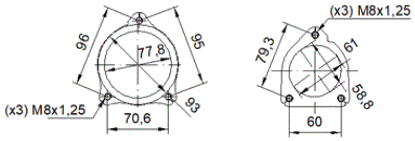
Ø 54,8 ext.
Ø 77x140°