SEAT, VOLKSWAGEN

# 33758D

| | | | |
|---|---|---|---|
| PK422 | | 950 | 5.50 |

Original-Artikelnummer:

6N0253058AV, 6N0253058AX, 6N0253058DX

| MARKE | MODELL | DATUM |
|---|---|---|
| SEAT | AROSA 1.7D SDi 1716 cc 44 Kw / 60 cv AKU | 8/97>8/00 |
| **VOLKSWAGEN** | LUPO 1.7D SDi 1716 cc 44 Kw / 60cv AKU | 10/98>8/00 |
| **VOLKSWAGEN** | POLO 1.9D 1896 cc 47 Kw / 64 cv AEF | 7/96>7/01 |
| **VOLKSWAGEN** | **POLO 1.9D 1896 cc 47 Kw / 64 cv AGD** | 7/96>12/99 |

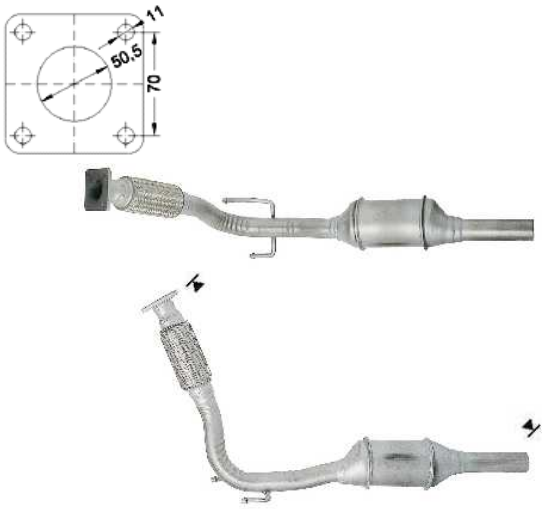


Ø 50 ext