SEAT, VOLKSWAGEN

33758D

KIT		mm.	Kg.
PK422		950	5.50

Original-Artikelnummer:

6N0253058AV, 6N0253058AX, 6N0253058DX

MARKE	MODELL	DATUM
SEAT	AROSA 1.7D SDi 1716 cc 44 Kw / 60 cv AKU	8/97>8/00
VOLKSWAGEN	**LUPO 1.7D SDi 1716 cc 44 Kw / 60cv AKU**	10/98>8/00
VOLKSWAGEN	POLO 1.9D 1896 cc 47 Kw / 64 cv AEF	7/96>7/01
VOLKSWAGEN	POLO 1.9D 1896 cc 47 Kw / 64 cv AGD	7/96>12/99

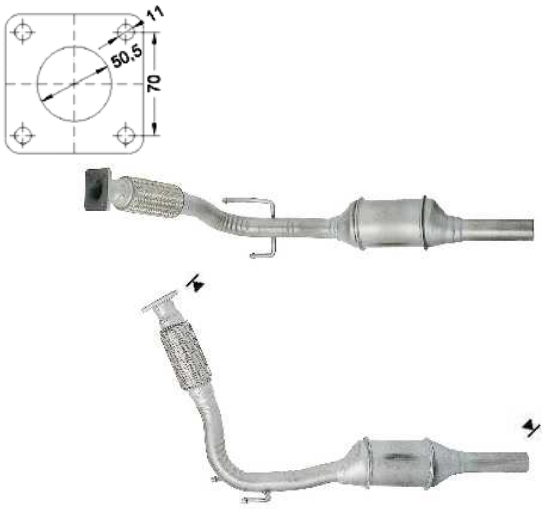

Ø 50 ext