

AUDI, SEAT, SKODA, VOLKSWAGEN

88017

PK1119 | OBD | 530 | 3.45 | Euro 5

Original-Artikelnummer:
1K0254201CX

MARKE	MODELL	DATUM
AUDI	A3 1.2i TSI 8V 1197 cc 77 Kw / 105 cv CBZB	6/11>5/13
SEAT	ALTEA 1.2i TSI 8V 1197 cc 77 Kw / 105 cv CBZB	6/11>
SEAT	LEON 1.2i TSI 8V 1197 cc 77 Kw / 105 cv CBZB	6/11>12/12
SKODA	OCTAVIA 1.2i TSI 8V 1197 cc 77 Kw / 105 cv CBZB	6/11>4/13
SKODA	YETI 1.2i TSI 8V 1197 cc 77 Kw / 105 cv CBZB	6/11>
VOLKSWAGEN	CADDY 1.2i TSI 8V 1197 cc 63 Kw / 85 cv CBZA	6/11>
VOLKSWAGEN	CADDY 1.2i TSI 8V 1197 cc 77 Kw / 105 cv CBZB	6/11>
VOLKSWAGEN	GOLF PLUS 1.2i TSI 8V 1197 cc 63 Kw / 85 cv CBZA	6/11>
VOLKSWAGEN	GOLF PLUS 1.2i TSI 8V 1197 cc 77 Kw / 105 cv CBZB	6/11>
VOLKSWAGEN	**GOLF VI 1.2i TSI 8V 1197 cc 63 Kw / 85 cv CBZA**	6/11>11/12
VOLKSWAGEN	GOLF VI 1.2i TSI 8V 1197 cc 77 Kw / 105 cv CBZB	6/11>
VOLKSWAGEN	JETTA 1.2i TSI 8V 1197 cc 77 Kw / 105 cv CBZB	7/11>
VOLKSWAGEN	NEW BEETLE 1.2i 8V 1197 cc 77 Kw / 105 cv CBZB	7/11>
VOLKSWAGEN	TOURAN 1.2i TSI 8V 1197 cc 77 Kw / 105 cv CBZB	6/11>5/15

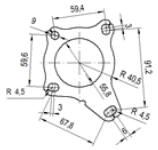
59,4
9
3
59,6
91,2
R 40,5
R 4,5
55,8
R 4,5
3
67,8
16

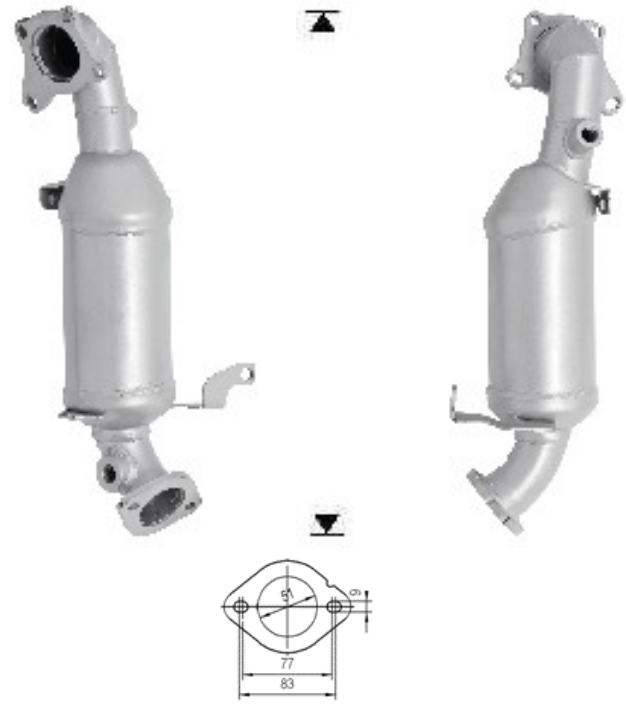
51
6
77
83