SEAT, SKODA, VOLKSWAGEN

33800

PK827 | OBD | mm. 620 | Kg. 2.65 | 2 | Euro 5

Original-Artikelnummer:

1K0254401PX

MARKE	MODELL	DATUM
SEAT	ALTEA 1.4i 16V 1390 cc 63 Kw / 86 cv CGGB	5/10>7/13
SEAT	LEON 1.4i 16V 1390 cc 63 Kw / 86 cv CGGB	3/10>8/13
SKODA	OCTAVIA 1.4i 16V 1390 cc 59 Kw / 80 cv CGGA	11/08>7/13
VOLKSWAGEN	**GOLF PLUS 1.4i 16V 1390 cc 59 Kw / 80 cv CGGA**	1/09>8/14
VOLKSWAGEN	GOLF VI 1.4i 16V 1390 cc 59 Kw / 80 cv CGGA	10/08>7/13

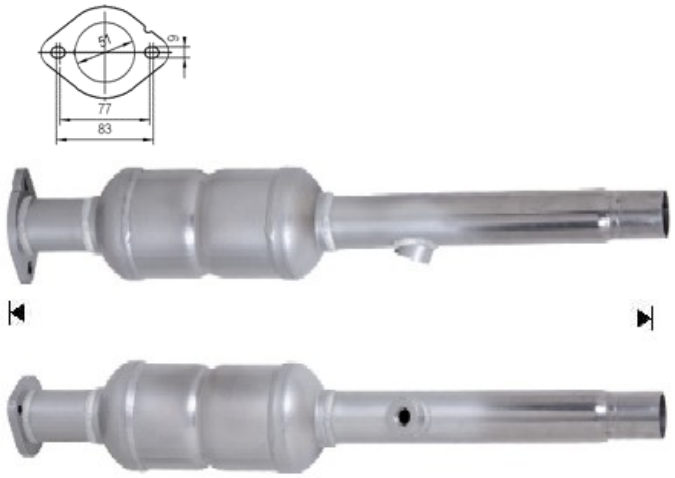

Ø 44,8 ext