TOYOTA

95181

PK1458 | OBD | 385 | 3.30 | Euro 6

Original-Artikelnummer:

17140F3010

MARKE	MODELL	DATUM
TOYOTA	COROLLA 1.5i VVTI 12V GPF 1490 cc 92 Kw / 125 cv M15AFKS	11/20>
TOYOTA	YARIS 1.5i Hybrid 12V GPF 1490 cc 85 Kw / 116 cv M15AFXE	7/20>
TOYOTA	YARIS CROSS 1.5i Hybrid 12V GPF 1490 cc 85 Kw / 116 cv M15AFXE	11/20>
TOYOTA	**YARIS 1.5i VVTI 12V GPF 1490 cc 88 Kw / 120 cv M15AFKS**	7/20>
TOYOTA	YARIS 1.5i VVTI 12V GPF 1490 cc 92 Kw / 125 cv M15AFKS	7/20>
TOYOTA	YARIS CROSS 1.5i VVTI 12V GPF 1490 cc 92 Kw / 125 cv M15AFKS	11/20>

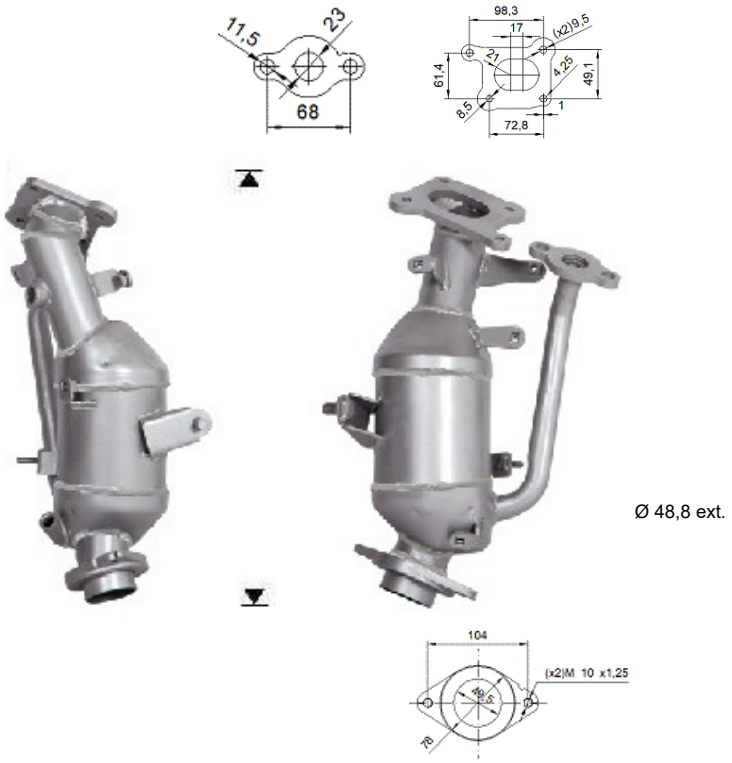

Ø 48,8 ext.