TOYOTA

95152

PK1110 | OBD | 2020 | 17.00 | 1 | 2

Original-Artikelnummer:

1742028710, 1742028712

MARKE	MODELL	DATUM
TOYOTA	RAV 4 2.0i 16V 1998 cc 112 Kw / 152 cv 1AZFE	11/05>11/12
TOYOTA	**RAV 4 2.4i 16V 2362 cc 125 Kw / 170 cv 2AZFE**	11/05>11/12

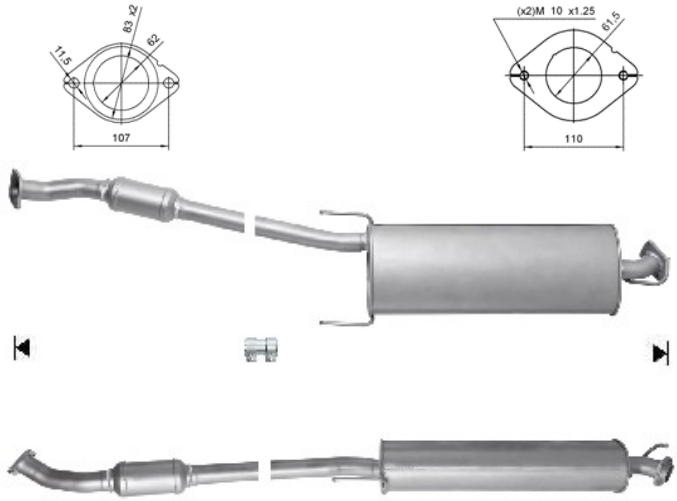

Ø 60.5 ext