TOYOTA

# 95152

PK1110 | OBD | 2020 | 17.00 | 2

Original-Artikelnummer:

1742028710, 1742028712

| MARKE | MODELL | DATUM |
|---|---|---|
| **TOYOTA** | **RAV 4 2.0i 16V 1998 cc 112 Kw / 152 cv 1AZFE** | 11/05>11/12 |
| **TOYOTA** | RAV 4 2.4i 16V 2362 cc 125 Kw / 170 cv 2AZFE | 11/05>11/12 |

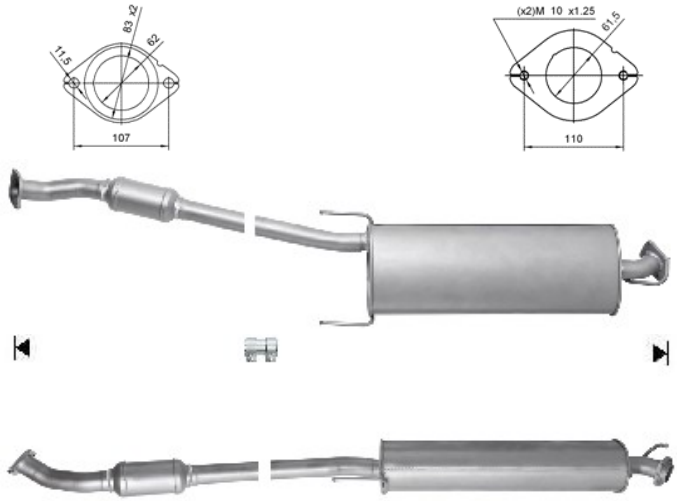


Ø 60.5 ext