TOYOTA

95187

PK1370 | OBD | 440 | 6.30 | Euro 6

Original-Artikelnummer:

171410T160

MARKE	MODELL	DATUM
TOYOTA	C-HR 1.8i VVTI 16V Full Hybrid 1798 cc 90 Kw / 122 cv 2ZRFXE	2/19>
TOYOTA	**COROLLA 1.8i VVTI 16V Full Hybrid 1798 cc 90 Kw / 122 cv 2ZRFXE**	11/20>

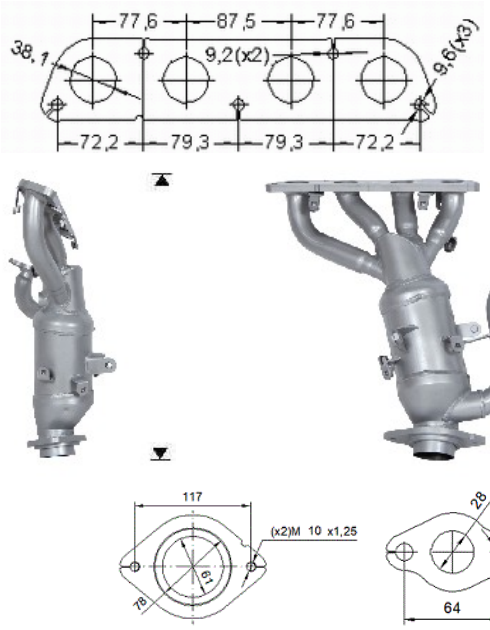

Ø 60,5 ext.