TOYOTA

95143D

PK959 | OBD | 2370 | 9.60

Original-Artikelnummer:

174100R030, 174100R040

MARKE	MODELL	DATUM
TOYOTA	**COROLLA VERSO 2.2TD D4D 2231 cc 100 Kw / 136 cv 2ADFTV**	8/05>2/09
TOYOTA	COROLLA VERSO 2.2TD D4D DPF 2231 cc 130 Kw / 177 cv 2ADFHV	8/05>4/07

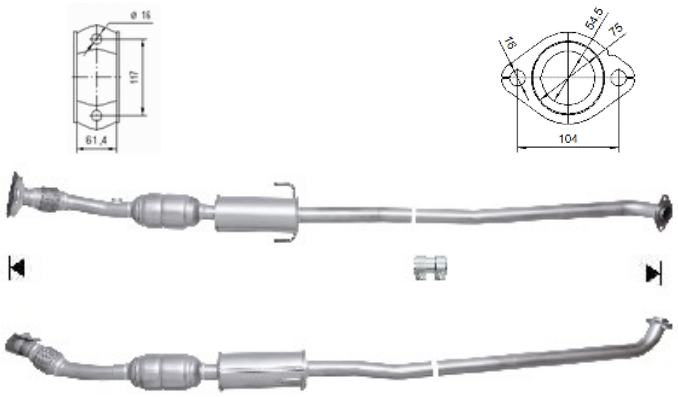

Ø 53,8 ext