SMART

71280

PK1147 | OBD | 975 | 6.95 | Euro 5

Original-Artikelnummer:

4514900081, 4514901381

MARKE	MODELL	DATUM
SMART	FORTWO 1.0i 12V 999 cc 45 Kw / 61 cv 132910 (451)	9/06>4/10
SMART	**FORTWO 1.0i 12V 999 cc 52 KW / 71 cv 132910 (451)**	9/06>4/10
SMART	FORTWO 1.0i 12V Turbo 999 cc 62 Kw / 84 cv 132930 (451)	9/06>4/10

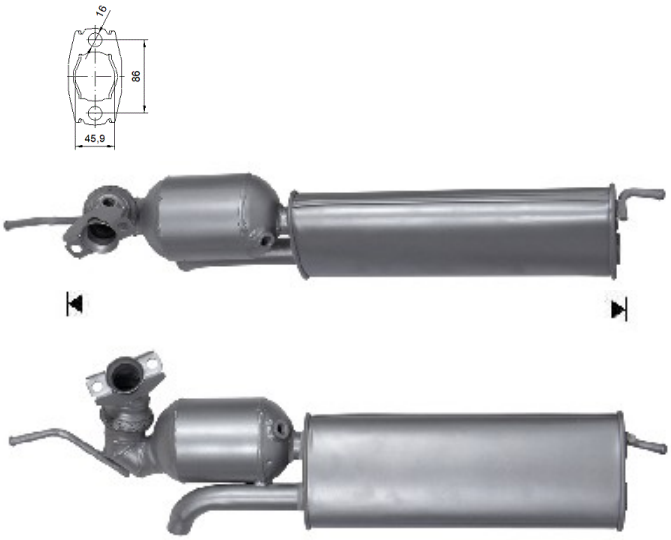

Ø 40 ext