SEAT, SKODA, VOLKSWAGEN

# 33800

PK827 | OBD | 620 | 2.65 | 2 | Euro 5

Original-Artikelnummer:

1K0254401PX

| MARKE | MODELL | DATUM |
|---|---|---|
| **SEAT** | **ALTEA 1.4i 16V 1390 cc 63 Kw / 86 cv CGGB** | 5/10>7/13 |
| **SEAT** | LEON 1.4i 16V 1390 cc 63 Kw / 86 cv CGGB | 3/10>8/13 |
| SKODA | OCTAVIA 1.4i 16V  1390 cc 59 Kw / 80 cv CGGA | 11/08>7/13 |
| VOLKSWAGEN | GOLF PLUS 1.4i 16V 1390 cc 59 Kw / 80 cv CGGA | 1/09>8/14 |
| VOLKSWAGEN | GOLF VI 1.4i 16V 1390 cc 59 Kw / 80 cv CGGA | 10/08>7/13 |

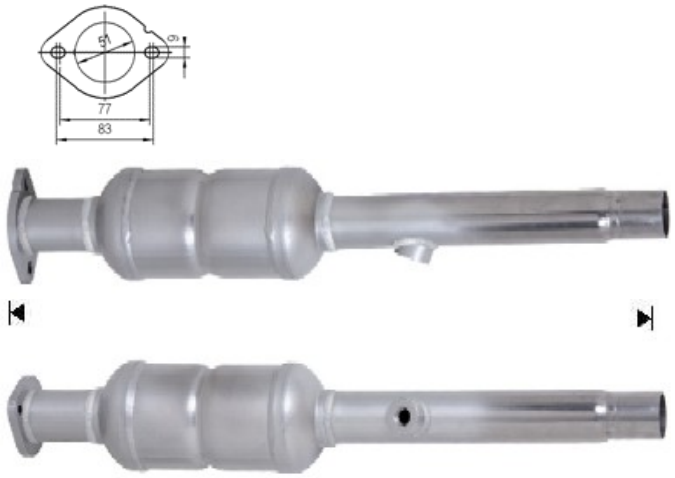


Ø 44,8 ext