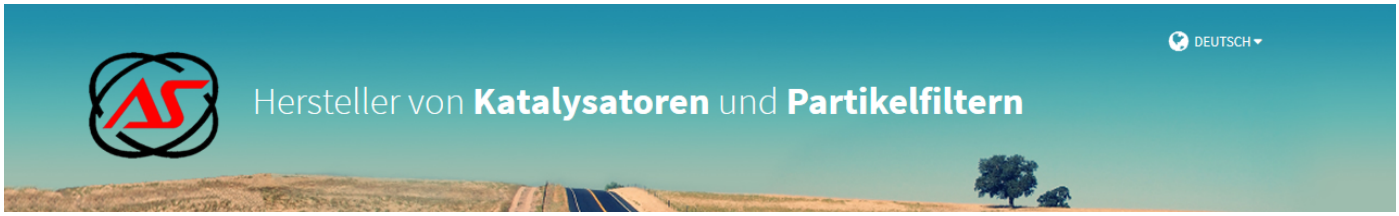

RENAULT

30189

PK712 | OBD | 470 mm. | 4.96 Kg.

Original-Artikelnummer:
8200118188, 8200885613
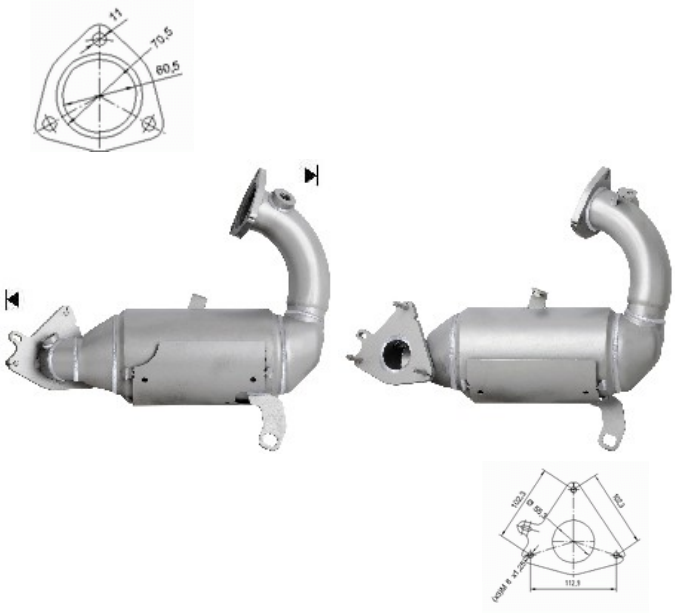
MARKE	MODELL	DATUM
RENAULT	ESPACE 2.0i 16V Turbo 1995 cc 121 Kw / 165 cv F4R	9/02>2/06
RENAULT	**ESPACE 2.0i 16V Turbo 1995 cc 125 Kw / 170 cv F4R**	4/05>2/06
RENAULT	LAGUNA 2.0i 16V Turbo 1995 cc 121 Kw / 165 cv F4R	3/03>9/07
RENAULT	LAGUNA 2.0i 16V Turbo 1995 cc 125 Kw / 170 cv F4R	3/05>11/10
RENAULT	MEGANE 2.0i 16V Turbo 1995 cc 121 Kw / 165 cv F4R	3/04>10/08
RENAULT	MEGANE 2.0i 16V Turbo 1995 cc 170 Kw / 230 cv F4R	3/04>10/08
RENAULT	SCENIC 2.0i 16V Turbo 1995 cc 121 Kw / 165 cv F4R	3/04>7/08
RENAULT	VEL SATIS 2.0i 16V Turbo 1995 cc 121 Kw / 165 cv F4R	1/02>1/05