CITROËN, PEUGEOT, TOYOTA

95161

PK1201 | OBD | 2300 | 7.05 | 2 | Euro 6

Original-Artikelnummer:

174100Q080, B001034380, B001121280

MARKE	MODELL	DATUM
CITROËN	C1 1.0i 12V 998 cc 51 Kw / 69 cv 1KRFE (CFB)	5/15>
CITROËN	C1 1.0i VTI 12V 998 cc 53 Kw / 72 cv 1KRFE (CFB)	6/18>
PEUGEOT	108 1.0i 12V 998 cc 51 Kw / 69 cv 1KRFE (CFB)	5/15>
PEUGEOT	**108 1.0i VTI 12V 998 cc 53 Kw / 72 cv 1KRFE (CFB)**	5/18>
TOYOTA	AYGO 1.0i 12V 998 cc 51 Kw / 69 cv 1KRFE	5/15>
TOYOTA	AYGO 1.0i VVTI 12V 998 cc 53 Kw / 72 cv 1KRFE	5/18>

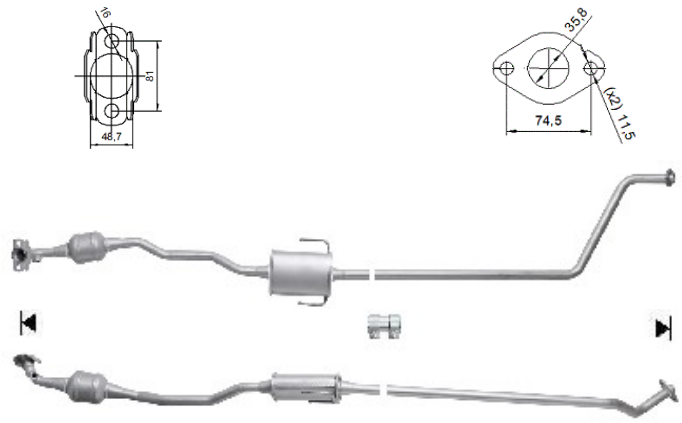

Ø 35.0 ext