CITROËN, PEUGEOT, TOYOTA

95160

KIT PK1200 | OBD | mm. 395 | Kg. 2.65 | 1 (1) | Euro 5 | Euro 6 (2)

Original-Artikelnummer:

171400Q090, 171400Q100, B000871480

MARKE	MODELL		DATUM
CITROËN	C1 1.0i 12V 998 cc 51 Kw / 69 cv 1KRFE (CFB)		5/14>5/15
CITROËN	C1 1.0i 12V 998 cc 51 Kw / 69 cv 1KRFE (CFB)	(1)(2)	5/15>
PEUGEOT	**108 1.0i 12V 998 cc 51 Kw / 69 cv 1KRFE (CFB)**		5/14>5/15
PEUGEOT	108 1.0i 12V 998 cc 51 Kw / 69 cv 1KRFE (CFB)	(1)(2)	5/15>
TOYOTA	AYGO 1.0i 12V 998 cc 51 Kw / 69 cv 1KRFE		5/14>5/15
TOYOTA	AYGO 1.0i 12V 998 cc 51 Kw / 69 cv 1KRFE	(1)(2)	5/15>4/18
TOYOTA	YARIS 1.0i 12V 998 cc 51 Kw / 69 cv 1KRFE	(1)(2)	7/14>5/20

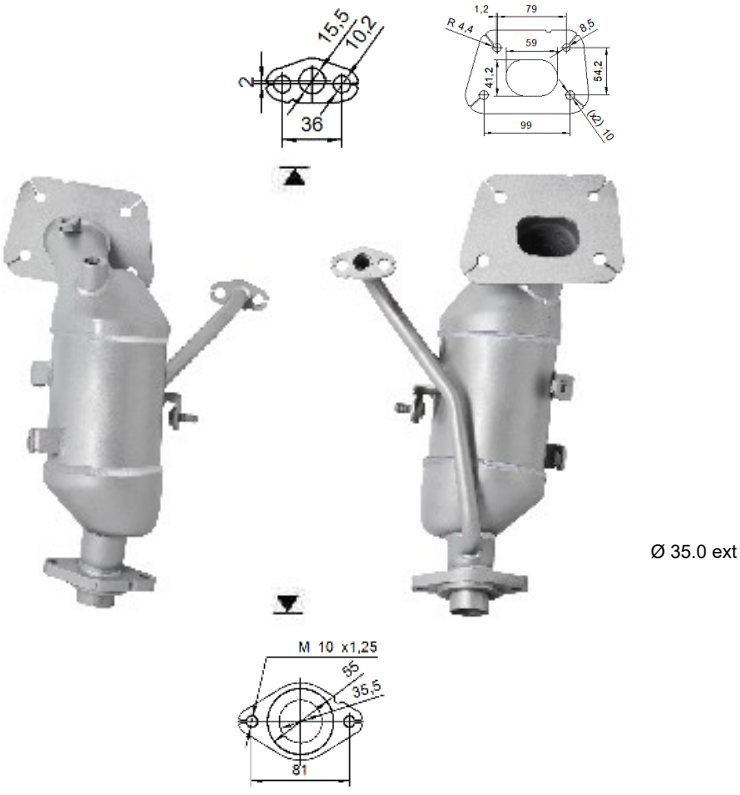

Ø 35.0 ext