CITROËN, PEUGEOT, TOYOTA

28683

PK853 | OBD | mm. 340 | Kg. 3.25 | Euro 5

Original-Artikelnummer:

0342L3, 1608916280, 171400Q060, 171400Q080

MARKE	MODELL	DATUM
CITROËN	C1 1.0i 12V 998 cc 50 Kw / 68 cv 1KR (CFA, CFB)	9/10>4/14
PEUGEOT	**107 1.0i 12V 998 cc 50 Kw / 68 cv 1KR (CFA, CFB)**	9/10>4/14
TOYOTA	AYGO 1.0i 12V 998 cc 50 Kw / 68 cv 1KRFE	9/10>4/14
TOYOTA	AYGO 1.0i 12V LPG 998 cc 50 Kw / 68 cv 1KRFE	2/12>5/14

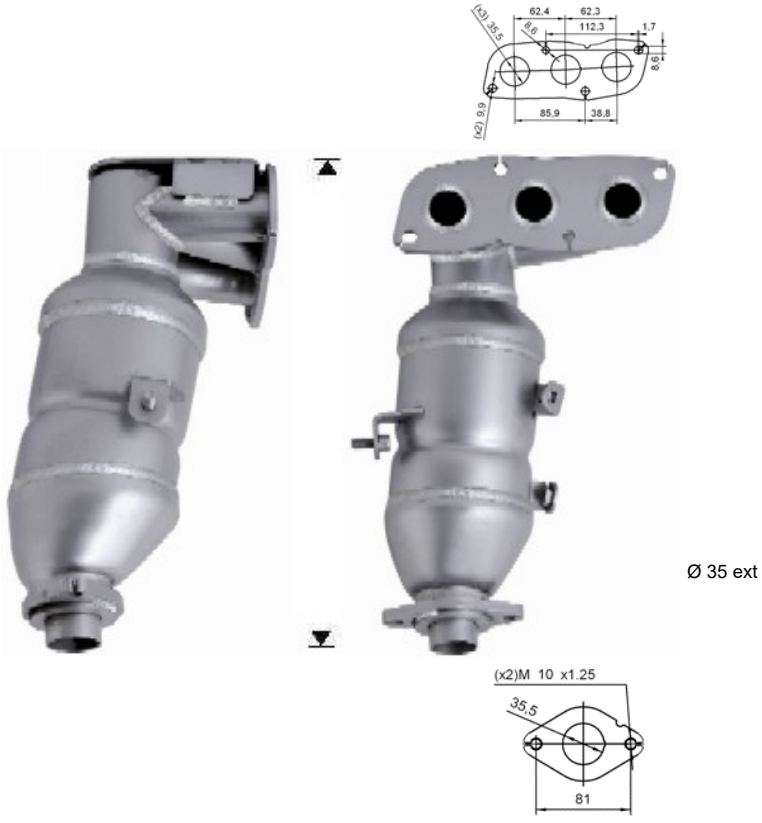

Ø 35 ext