Hersteller von **Katalysatoren** und **Partikelfiltern**

OPEL, SAAB

21793

PK1279 | OBD | mm. 350 | Kg. 2.40 | 1 | Euro 5 | Euro 6 (1)

Original-Artikelnummer:
55564516, 855677

MARKE	MODELL		DATUM
OPEL	ASTRA 1.6i Turbo 16V 1598 cc 132 Kw / 180 cv A16LET		9/09>
OPEL	CORSA D 1.6i Turbo 16V 1598 cc 110 Kw / 150 cv A16LEL		1/10>9/14
OPEL	CORSA D 1.6i Turbo 16V 1598 cc 141 Kw / 192 cv A16LER		1/10>9/14
OPEL	CORSA D 1.6i Turbo 16V 1598 cc 155 Kw / 210 cv A16LES		1/10>9/14
OPEL	**CORSA E 1.6i Turbo 16V 1598 cc 141 Kw /192 cv B16LER**	(1)	3/15>
OPEL	CORSA E 1.6i Turbo 16V 1598 cc 152 Kw / 207 cv B16LES	(1)	3/15>
OPEL	INSIGNIA 1.6i Turbo 16V 1598 cc 132 Kw / 180 cv A16LET		1/09>
SAAB	9-5 1.6i Turbo 16V 1598 cc 132 Kw / 180 cv A16LET		5/10>1/12
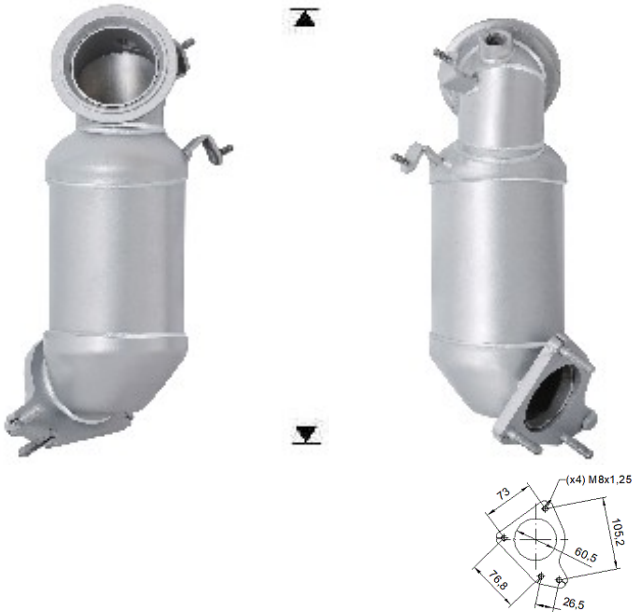
Ø 80,5 ext