MERCEDES

71285

PK513 | OBD | 1710 | 7.85

Original-Artikelnummer:

2034905919, 2034907519

MARKE	MODELL	DATUM
MERCEDES	C160 Kompressor 1.8i 16V 1796 cc 90 Kw / 122 cv 271921 W203	6/02>2/08
MERCEDES	C180 Kompressor 1.8i 16V 1796 cc 105 Kw / 143 cv 271946 W203	6/02>2/08
MERCEDES	C180 Kompressor 1.8i 16V 1796 cc 120 Kw / 163 cv 271940 W203	6/02>2/08
MERCEDES	C200 Kompressor 1.8i 16V 1796 cc 120 Kw / 163 cv 271940 W203	6/02>2/08
MERCEDES	C200 Kompressor 1.8i 16V 1796 cc 125 Kw / 170 cv 271942 W203	6/02>2/08
MERCEDES	**C230 Kompressor 1.8i 16V 1796 cc 141 Kw / 192 cv 271948 W203**	6/02>2/08
MERCEDES	CLK200 Kompressor 1.8i 16V 1796 cc 120 Kw / 163 cv 271940 C209	6/02>3/08
MERCEDES	CLK200 Kompressor 1.8i 16V 1796 cc 125 Kw / 170 cv 271942 C209	2/03>3/08

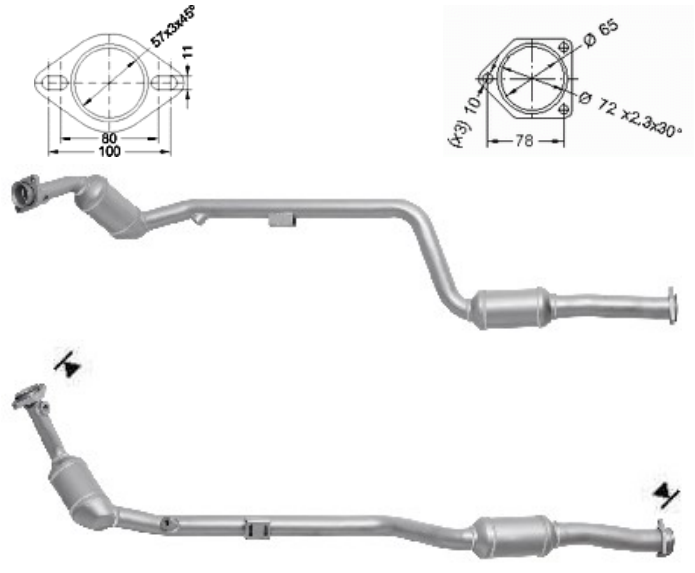

Ø 68x90°

Ø 74x120°