LAND ROVER

68018D

PK1157 | OBD | 600 | 4.60 | Euro 5

Original-Artikelnummer:

LR044105

MARKE	MODELL	DATUM
LAND ROVER	FREELANDER 2.2TD 2WD DPF 2179 cc 110 Kw / 150 cv 224DT (DW12)	8/10>10/14
LAND ROVER	FREELANDER 2.2TD AWD DPF 2179 cc 110 Kw / 150 cv 224DT (DW12)	8/10>10/14
LAND ROVER	FREELANDER 2.2TD AWD DPF 2179 cc 112 Kw / 152 cv 224DT (DW12)	8/10>10/14
LAND ROVER	**FREELANDER 2.2TD AWD DPF 2179 cc 115 Kw / 156 cv 224DT (DW12)**	8/10>10/14
LAND ROVER	FREELANDER 2.2TD AWD DPF 2179 cc 118 Kw / 160 cv 224DT (DW12)	8/10>10/14
LAND ROVER	FREELANDER 2.2TD AWD DPF 2179 cc 140 Kw / 190 cv 224DT (DW12)	8/10>10/14

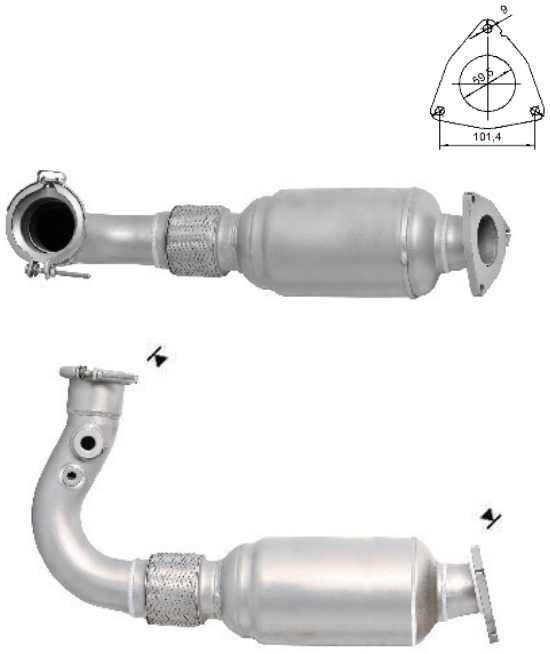

Ø 84x140°