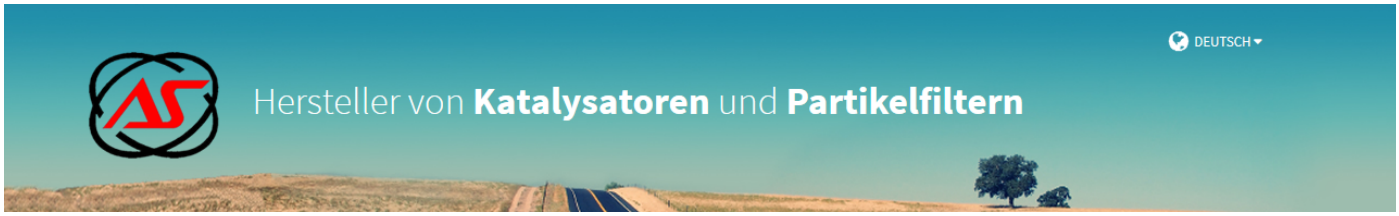

HONDA

22122

PK983 | OBD | mm. 320 | Kg. 2.95 | 1 | Euro 5

Original-Artikelnummer:

18190RB0E50

MARKE	MODELL	DATUM
HONDA	JAZZ 1.2i iVTEC 16V 1198 cc 66 Kw / 90 cv L12B1, L12B2	7/10>12/15
HONDA	**JAZZ 1.4i iVTEC 16V 1339 cc 73 Kw / 99 cv L13Z1, L13Z2**	7/10>12/15

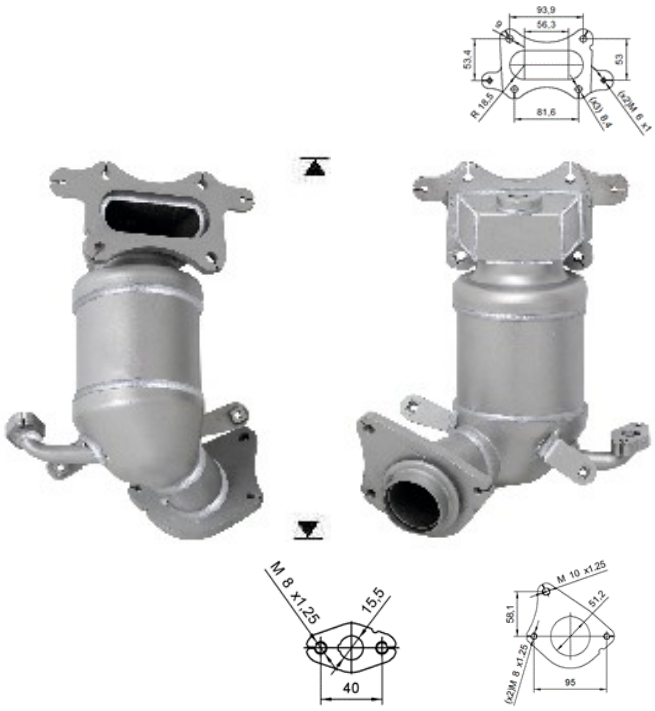

Ø 50,5 ext.