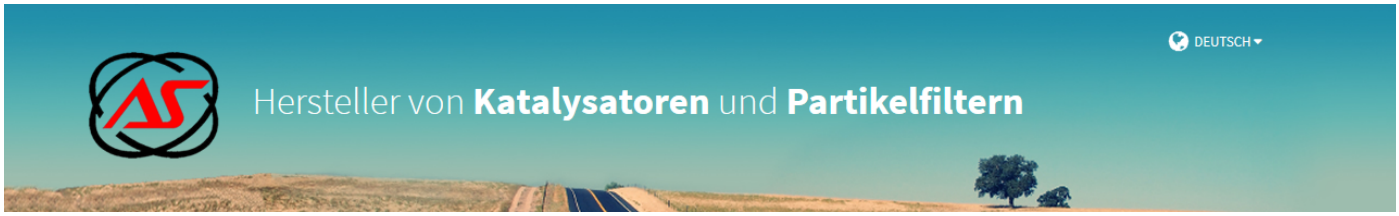

FORD

20456D

PK1150 700 4.00

Original-Artikelnummer:

1681480, 1706906, 1728766, 1755322
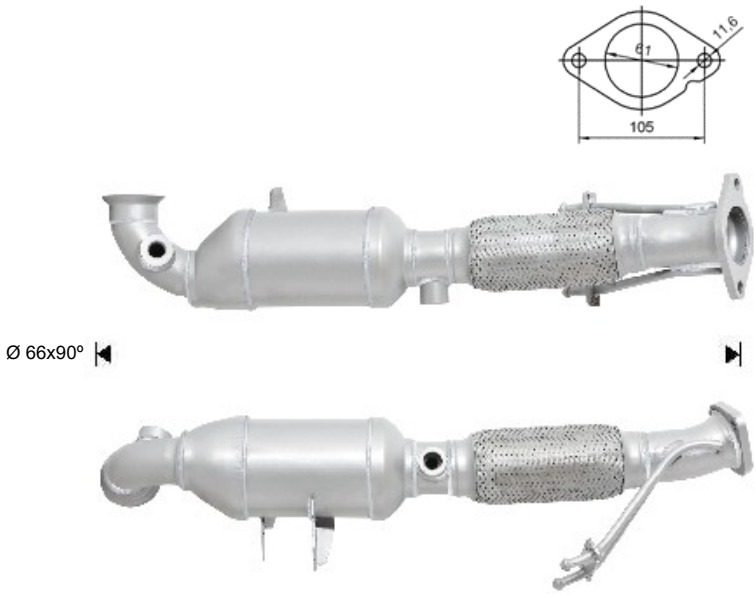
MARKE	MODELL	DATUM
FORD	GALAXY 2.0TD TDCI DPF 1997 cc 85 Kw / 116 cv KLWA, TYWA	3/10>4/15
FORD	GALAXY 2.0TD TDCI DPF 1997 cc 100 Kw / 136 cv UKWA	3/10>4/15
FORD	GALAXY 2.0TD TDCI DPF 1997 cc 103 Kw / 140 cv UFWA	3/10>4/15
FORD	**GALAXY 2.0TD TDCI DPF 1997 cc 120 Kw / 163 cv TXWA**	3/10>4/15
FORD	MONDEO 2.0TD TDCI DPF 1997 cc 85 Kw / 116 cv KLBA, LPBA, TYBA	3/10>12/14
FORD	MONDEO 2.0TD TDCI DPF 1997 cc 100 Kw / 136 cv UKBA, UKBB	3/10>12/14
FORD	MONDEO 2.0TD TDCI DPF 1997 cc 103 Kw / 140 cv UFBA, UFBB	3/10>12/14
FORD	MONDEO 2.0TD TDCI DPF 1997 cc 120 Kw / 163 cv TXBA, TXBB	3/10>12/14
FORD	S-MAX 2.0TD TDCI DPF 1997 cc 85 Kw / 116 cv KLWA, TYWA	3/10>4/15
FORD	S-MAX 2.0TD TDCI DPF 1997 cc 100 Kw / 136 cv UKWA	3/10>4/15
FORD	S-MAX 2.0TD TDCI DPF 1997 cc 103 Kw / 140 cv UFWA	3/10>4/15
FORD	S-MAX 2.0TD TDCI DPF 1997 cc 120 Kw / 163 cv TXWA	3/10>4/15