


ALFA ROMEO, FIAT

# 55330

PK880 | OBD | 450 | 6.10 | Euro 6

Original-Artikelnummer:

50527721, 51824930, 51929835, 51965162, 52034498

| MARKE | MODELL | DATUM |
|---|---|---|
| ALFA ROMEO | MI-TO 1.4i 8V 1368 cc 51 Kw / 69 cv 955A9000 | 6/13>10/18 |
| ALFA ROMEO | MI-TO 1.4i 8V 1368 cc 57 Kw / 78 cv 350A1000 | 6/13>10/18 |
| **FIAT** | FIORINO 1.4i 8V CNG 1368 cc 51 Kw / 69 cv 350A1000 | 9/09> |
| **FIAT** | FIORINO 1.4i 8V 1368 cc 57 Kw / 78 cv 350A1000 | 12/10> |
| **FIAT** | FIORINO 1.4i 8V CNG 1368 cc 57 Kw / 78 cv 350A1000 | 9/09> |
| **FIAT** | GRANDE PUNTO 1.4i 8V CNG 1368 cc 57 Kw / 78 cv 350A1000 | 3/09>12/12 |
| **FIAT** | PANDA 1.2i 8V 1242 cc 51 Kw / 69 cv 169A4000 | 2/12> |
| **FIAT** | PANDA 1.2i 8V LPG 1242 cc 51 Kw / 69 cv 169A4000 | 2/12> |
| **FIAT** | PUNTO 1.2i 8V 1242 cc 49 Kw / 67 cv 199B9000 | 2/14> |
| **FIAT** | PUNTO 1.4i 8V 1368 cc 55 Kw / 75 cv 199A7000 | 3/12> |
| **FIAT** | PUNTO 1.4i 8V 1368 cc 57 Kw / 78 cv 350A1000 | 3/12> |
| **FIAT** | **PUNTO 1.4i 8V CNG 1368 cc 57 Kw / 78 cv 350A1000** | 10/09> |
| **FIAT** | PUNTO 1.4i 8V LPG 1368 cc 57 Kw / 78 cv 350A1000 | 6/09>2/12 |
| **FIAT** | QUBO 1.4i 8V 1368 cc 57 Kw / 78 cv 350A1000 | 9/09> |
| **FIAT** | QUBO 1.4i 8V CNG 1368 cc 57 Kw / 78 cv 350A1000 | 9/09> |

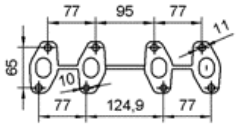
77
95
77
11
65
10
77
124,9
77

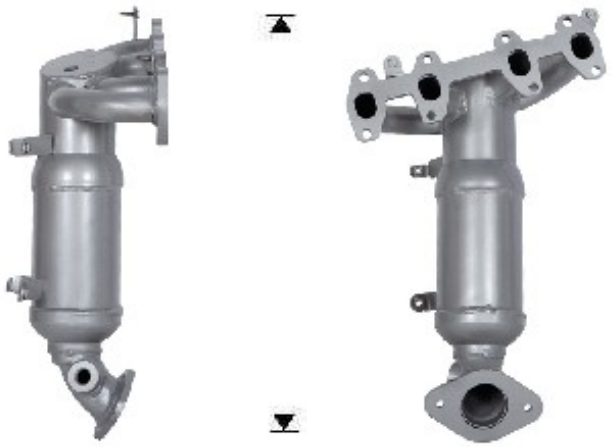

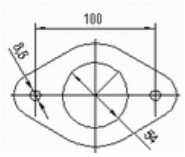
100
8,5
96